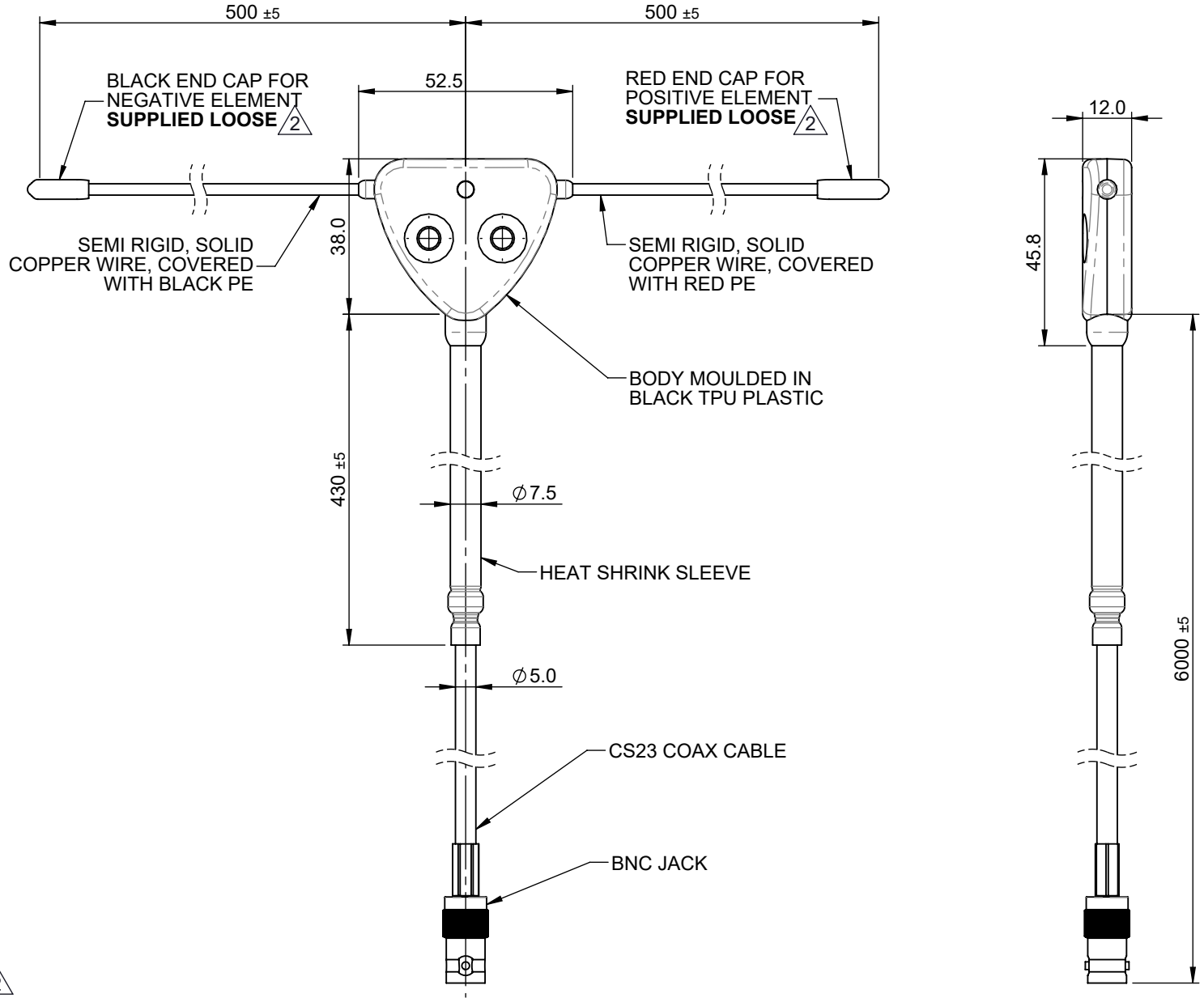

2

NOTES:

1. SAMPLES MUST BE APPROVED BY PANORAMA ANTENNAS Q.C. BEFORE COMMENCING PRODUCTION.
2. ALL MATERIALS SUPPLIED MUST BE RoHS3 (DIRECTIVE (EU) 2015/863) COMPLIANT AND MUST NOT CONTAIN ANY SUBSTANCES OF VERY HIGH CONCERN (SVHCs) LISTED UNDER REACH OR POLY-AROMATIC HYDROCARBONS (PAHs), OR PERSISTENT ORGANIC POLLUTANTS (POPs) CONTROLLED BY THE STOCKHOLM CONVENTION.

DRG. No.	VCD-V162-6BJ
SHEET	1 OF 2
PRODUCT/ASSEMBLY	1003 - COVERT ANTENNAS
DESCRIPTION	150-174MHz COVERT VEHICLE DPOLE 6m BNC JACK
MATERIAL	N/A
FINISH	N/A
WEIGHT	290(NET)g
APPROVED	KD
DO.CHECK	AR
SCALE	2:3
	DIMENSIONS IN mm
DO NOT SCALE	3RD ANGLE PROJECTION

PCN	REV.	DESCRIPTION	DATE	DRN
01019	2	DRAWN IN SOLIDWORKS. NOTES UPDATED	15/06/2021	GP

TOLERANCES UNLESS OTHERWISE STATED			
0 DEC. PLACE	±0.5	2 DEC. PLACES	±0.1
1 DEC. PLACE	±0.2	ANGULAR	±1°

△ DENOTES LATEST ISSUE CHANGES

⬭ DENOTES CRITICAL VALUE

PANORAMA ANTENNAS

THIS DOCUMENT MUST NOT BE COPIED OR DISCLOSED TO A THIRD PARTY WITHOUT THE WRITTEN CONSENT OF PANORAMA ANTENNAS LTD.

© 2021

A4