1	2	3	4	5	6

3RD ANGLE PROJECTION | DO NOT SCALE | △ DENOTES LATEST ISSUE CHANGES | DENOTES CRITICAL VALUE | © 2019 A4 THIS DOCUMENT MUST NOT BE COPIED OR DISCLOSED TO A THIRD PARTY WITHOUT THE WRITTEN CONSENT OF PANORAMA ANTENNAS LTD. | DRG. No. GPSME-VAR

TOLERANCES UNLESS OTHERWISE STATED			
0 DEC. PLACE	±0.5	2 DEC. PLACES	±0.1
1 DEC. PLACE	±0.2	ANGULAR	±1°

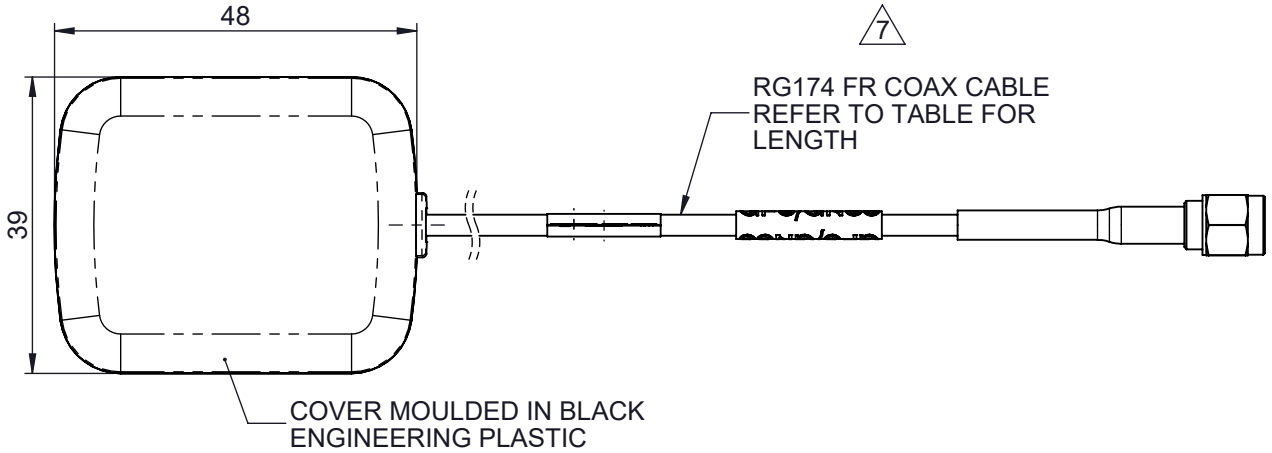

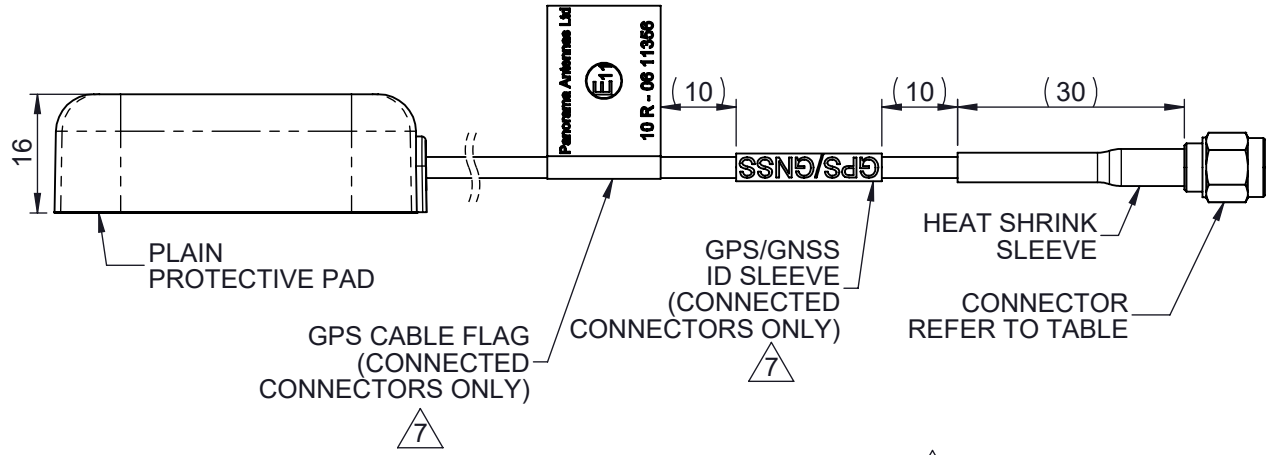

PART No.	CONNECTOR	CABLE LENGTH 'L' (7)	WEIGHT net (g)
GPSME-015SP	SMA PLUG	150 ±30	42
GPSME-02SP	SMA PLUG	200 ±30	43
GPSME-1-5SP	SMA PLUG	1500 ±30	60
GPSME-3F	FME SOCKET	3000 ±30	80
GPSME-3FAKCJ	FAKRA C JACK	3000 ±30	80
GPSME-3MCXP	MCX PLUG	3000 ±30	80
GPSME-3MMCXP	MMCX PLUG	3000 ±30	80
GPSME-3SMBP	SMB PLUG	3000 ±30	80
GPSME-3SP	SMA PLUG	3000 ±30	80
GPSME-6	NONE	6000 ±30	113
GPSME-6FP	FME PLUG	6000 ±30	118
GPSME-6MMCX	MMCX PLUG	6000 ±30	118
GPSME-6SMBBUC	SMB BUCCANEER PLUG	6000 ±30	118
GPSME-6SMBP	SMB PLUG	6000 ±30	118
GPSME-6SMCP	SMC PLUG	6000 ±30	118
GPSME-6SP	SMA PLUG	6000 ±30	118

7

SW3-181 AND SW3-948 SUPPLIED LOOSE ON NON-CONNECTED CONNECTORS

GPS/GNSS

CE UK CA

Panorama Antennas ltd
E11
10 R 06 11356

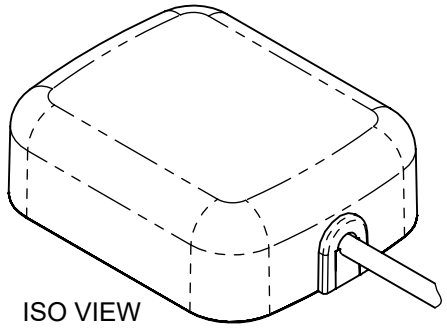

ISO VIEW
SCALE 1:1

NOTES:

1. MOULDED HOUSING TO BE FREE FROM FLASH, SINK AND FLOW MARKS, BLEMISHES AND ALL OTHER SURFACE IMPERFECTIONS.
2. SAMPLES MUST BE APPROVED BY PANORAMA ANTENNAS Q.C. BEFORE COMMENCING PRODUCTION.
3. ALL MATERIALS SUPPLIED MUST BE RoHS3 (DIRECTIVE (EU) 2015/863) COMPLIANT AND MUST NOT CONTAIN ANY SUBSTANCES OF VERY HIGH CONCERN (SVHCs) LISTED UNDER REACH OR POLY-AROMATIC HYDROCARBONS (PAHs), OR PERSISTENT ORGANIC POLLUTANTS (POPs) CONTROLLED BY THE STOCKHOLM CONVENTION.

PCN	REV.	DESCRIPTION	DATE	DRN.
01019	3	VAR DRAWING CREATED -ALL VARIANTS	10/09/2019	PE
01019	4	3M SMA PLUG VARIANT ADDED	11/02/2020	AR
01019	5	GPS MODULE UPDATED (HG30), VARIANT ADDED.	21/01/2021	PE
01019	6	CABLE UPDATE, SMBBUC VERSION ADDED	27/04/2021	AR
01019	7	GPS CABLE FLAG AND ID SLEEVE ADDED, 3D MODEL ADDED	30/09/2022	AR

PRODUCT/ASSEMBLY: 1009 - MAGNETIC MOUNT ANTENNAS
MATERIAL: N/A
FINISH: N/A
WEIGHT: SEE TABLE
SHEET 1 OF 2

DESCRIPTION: GPS MINI MAG GPS ANT VARm VAR CONNECTOR

APPROVED	D.O.CHECK	SCALE	DIMENSIONS IN mm
PE	NL	1:1	

PANORAMA ANTENNAS