3RD ANGLE PROJECTION	DO NOT SCALE	DENOTES LATEST ISSUE CHANGES	DENOTES CRITICAL VALUE	© 2021 A4	THIS DOCUMENT MUST NOT BE COPIED OR DISCLOSED TO A THIRD PARTY WITHOUT THE WRITTEN CONSENT OF PANORAMA ANTENNAS LTD.	DRG. No.	LGAMM-7-27-S24-58-VAR

TOLERANCES UNLESS OTHERWISE STATED			
0 DEC. PLACE	±0.5	2 DEC. PLACES	±0.1
1 DEC. PLACE	±0.2	ANGULAR	±1°

OPERATING FREQUENCIES:
2G/3G/4G: 698 - 960 / 1710 - 2700 MHz
WIFI: 2400 - 2485 / 4900 - 6000 MHz
GPS/GNSS: 1562 - 1612 MHz LNA

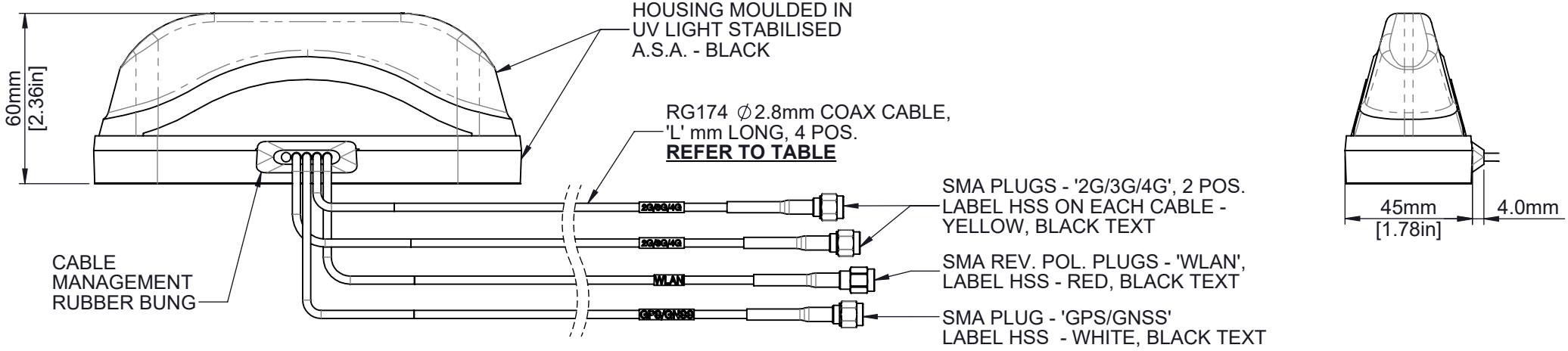

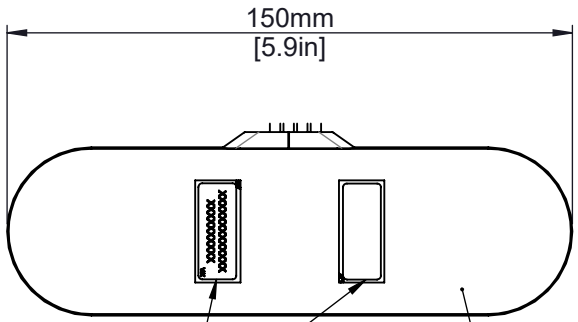

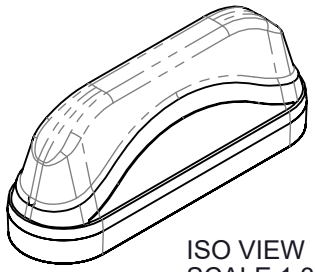

PART NO.	LENGTH 'L' (mm)	NET WEIGHT (g)
LGAMM-7-27-S24-58-3	3000	480

NOTES:

1. SAMPLES MUST BE APPROVED BY PANORAMA ANTENNAS Q.C. BEFORE COMMENCING PRODUCTION.
2. ALL MATERIALS SUPPLIED MUST BE RoHS3 (DIRECTIVE (EU) 2015/863) COMPLIANT AND MUST NOT CONTAIN ANY SUBSTANCES OF VERY HIGH CONCERN (SVHCs) LISTED UNDER REACH OR POLY-AROMATIC HYDROCARBONS (PAHs), OR PERSISTENT ORGANIC POLLUTANTS (POPs) CONTROLLED BY THE STOCKHOLM CONVENTION.

PCN	REV.	DESCRIPTION	DATE	DRN.
01019	1	PRODUCTION ISSUE	23/04/2021	GP

PRODUCT/ASSEMBLY: 1012 - MIMO & DIVERSITY ANTENNAS
MATERIAL: N/A
FINISH: N/A
WEIGHT SEE TABLE
SHEET 1 OF 2

DESCRIPTION: MAG LO PRO GPS+MIMO 2/3/4G +SiSo WIFI VARm

APPROVED	D.O.CHECK	SCALE	DIMENSIONS IN mm
KD	AA	1:2	

PANORAMA ANTENNAS