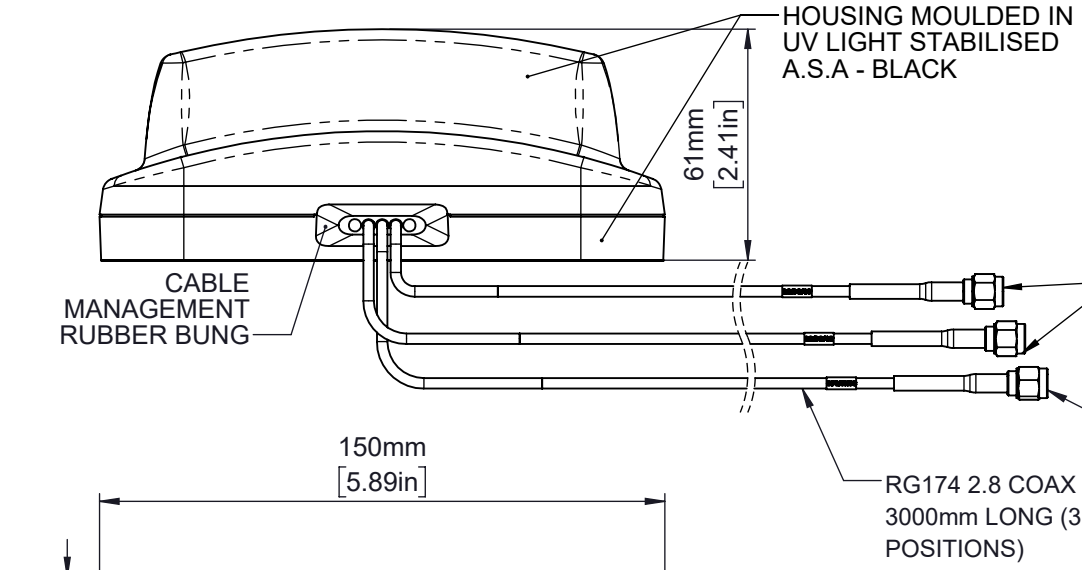

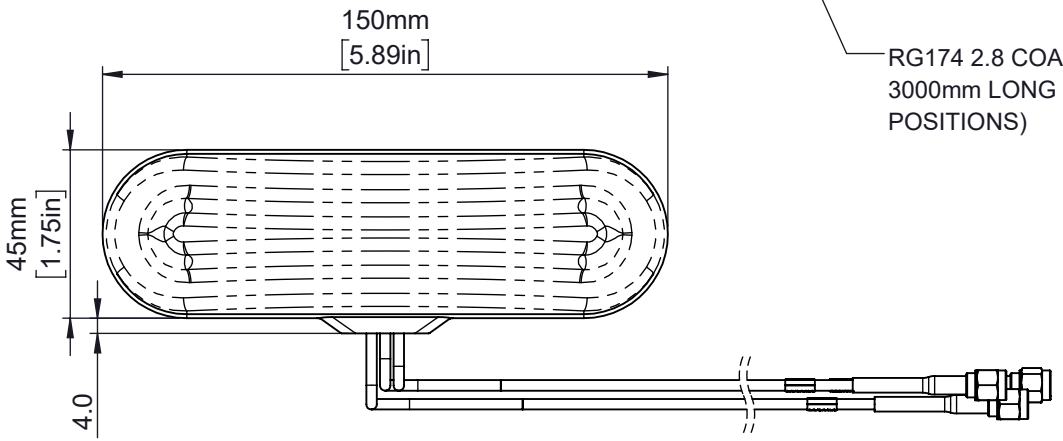

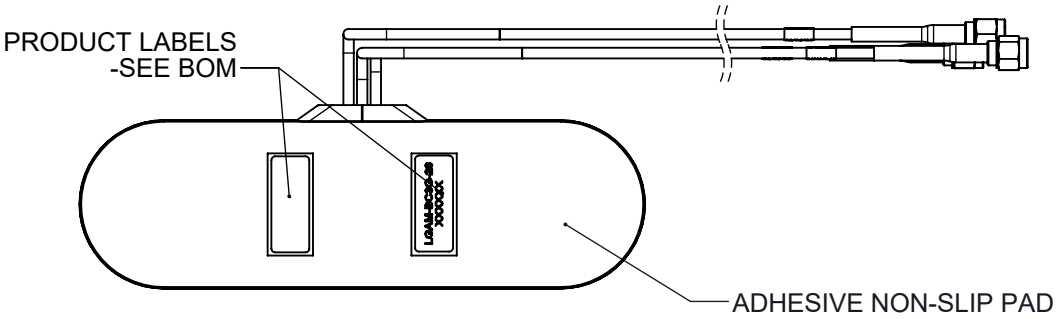

OPERATING FREQUENCIES

2G/3G/4G: 698 - 960 / 1710 - 2700 MHz x2
GPS/GNSS: 1562 - 1612 MHz 26dB LNA

NOTES:

1. SAMPLES MUST BE APPROVED BY PANORAMA ANTENNAS Q.C. BEFORE COMMENCING PRODUCTION.

2. ALL MATERIALS SUPPLIED MUST BE RoHS2 (DIRECTIVE 2011/65/EU) COMPLIANT AND MUST NOT CONTAIN ANY SUBSTANCES OF VERY HIGH CONCERN (SVHCs) LISTED UNDER REACH OR POLY-AROMATIC HYDROCARBONS (PAHs), OR PERSISTENT ORGANIC POLLUTANTS (POPs) CONTROLLED BY THE STOCKHOLM CONVENTION.

ISO VIEW
SCALE 1:3

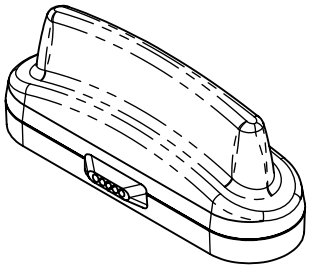

DRG. No.	LGAMM-BC3G-26-3SP
SHEET	1 OF 1
PRODUCT/ASSEMBLY	2012 - MINO AND DIVERSITY ANTENNAS
DESCRIPTION	LOW PROF MIMO 2/3/4G GPS/GNSS 3m SMAP MAGNET ANTENNA
MATERIAL	N/A
FINISH	N/A
WEIGHT	521.36g
APPROVED	KD
DO.CHECK	MM
SCALE	1:2
	DIMENSIONS IN mm
DO NOT SCALE	3RD ANGLE PROJECTION

PCN	REV.	DESCRIPTION	DATE	DRN
01019	A	INITIAL ISSUE	23/05/2017	IC
01019	A	INITIAL ISSUE	20/06/2017	IC
01019	B	PRODUCTION DRAWING RELATED UPDATES	09/08/2017	IC
01019	C	3D FILE UPDATED	06/09/2017	IC
01019	1	PRODUCTION ISSUE (NO CHANGE)	24/04/2018	IC

TOLERANCES UNLESS OTHERWISE STATED			
0 DEC. PLACE	±0.5	2 DEC. PLACES	±0.1
1 DEC. PLACE	±0.2	ANGULAR	±1°

△ DENOTES LATEST ISSUE CHANGES

⬭ DENOTES CRITICAL VALUE

PANORAMA ANTENNAS

THIS DOCUMENT MUST NOT BE COPIED OR DISCLOSED TO A THIRD PARTY WITHOUT THE WRITTEN CONSENT OF PANORAMA ANTENNAS LTD.

© 2017

A4