FREQUENCY: 433 MHz

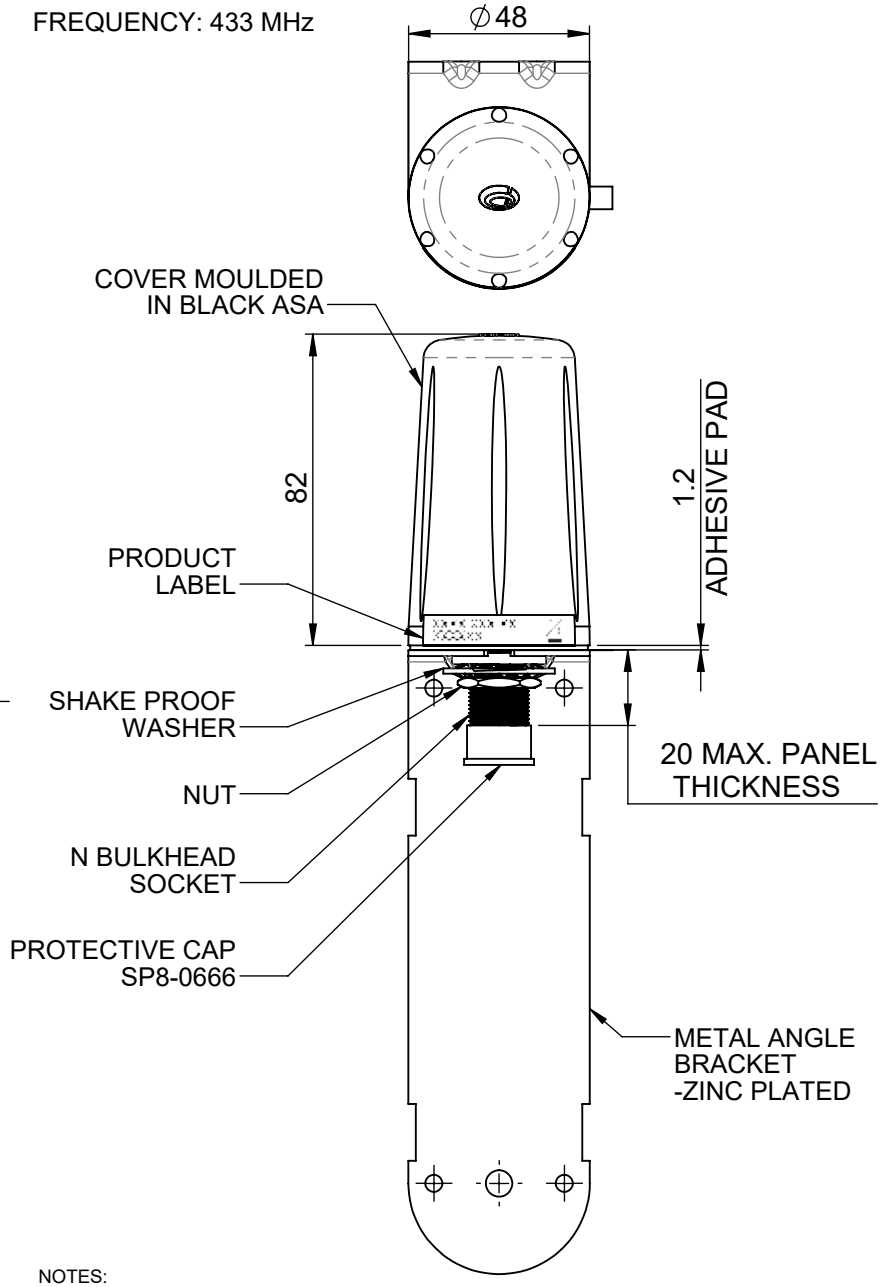

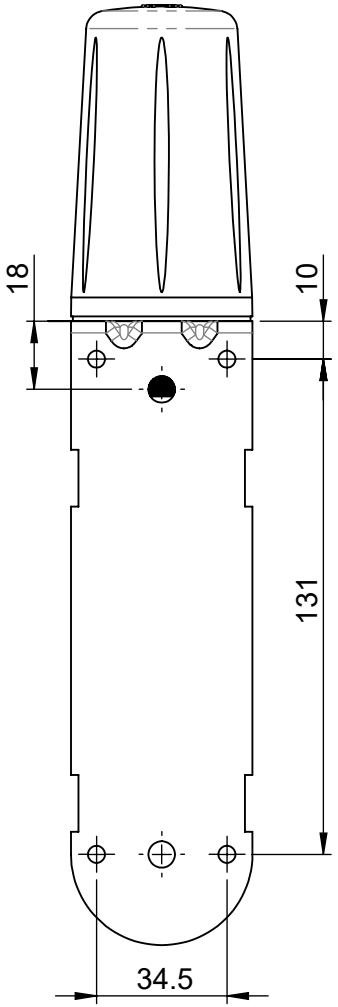

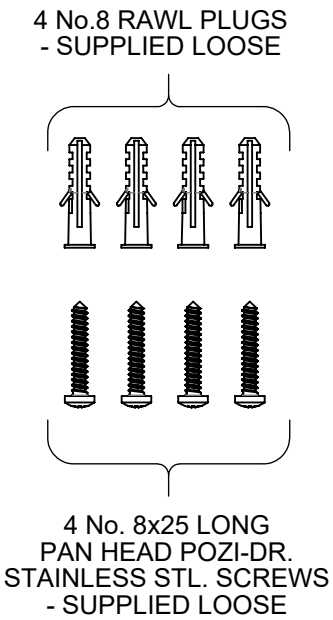

ISO VIEW
SCALE 1:3

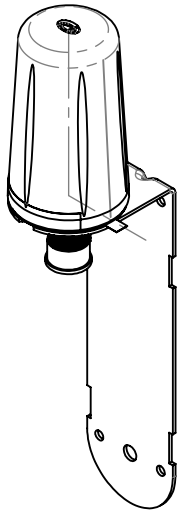

NOTES:

1. SAMPLES MUST BE APPROVED BY PANORAMA ANTENNAS Q.C. BEFORE COMMENCING PRODUCTION.
2. ALL MATERIALS SUPPLIED MUST BE RoHS2 (DIRECTIVE 2011/65/EU) COMPLIANT AND MUST NOT CONTAIN ANY SUBSTANCES OF VERY HIGH CONCERN (SVHCs) LISTED UNDER REACH OR POLY-AROMATIC HYDROCARBONS (PAHs), OR PERSISTENT ORGANIC POLLUTANTS (POPs) CONTROLLED BY THE STOCKHOLM CONVENTION.

DRG. No.	LPBU-433-NJ
SHEET	1 OF 1
PRODUCT/ASSEMBLY	LOW PROFILE
DESCRIPTION	LOW PROF ANT 433MHz N SOCKET
MATERIAL	N/A
FINISH	N/A
WEIGHT	293.91g
APPROVED	KD
DO.CHECK	MM
SCALE	1:2
	DIMENSIONS IN mm
DO NOT SCALE	3RD ANGLE PROJECTION

PCN	REV.	DESCRIPTION	DATE	DRN
01019	A	INITIAL ISSUE	14/06/2017	AR

TOLERANCES UNLESS OTHERWISE STATED

0 DEC. PLACE	±0.5	2 DEC. PLACES	±0.1
1 DEC. PLACE	±0.2	ANGULAR	±1°

△ DENOTES LATEST ISSUE CHANGES

⬭ DENOTES CRITICAL VALUE

PANORAMA ANTENNAS

THIS DOCUMENT MUST NOT BE COPIED OR DISCLOSED TO A THIRD PARTY WITHOUT THE WRITTEN CONSENT OF PANORAMA ANTENNAS LTD.

© 2016

A4