THIS IS A PROPRIETARY ITEM OF PANORAMA ANTENNAS LTD. AND COULD BE SUBJECT TO CHANGE WITHOUT PRIOR NOTICE. THIS ITEM IS RoHS COMPLIANT.

NOTES: –

1. MOUNTING HOLE ø12.5 (1/2")
   FOR MOUNTING FROM INSIDE VEHICLE.
   MOUNTING HOLE ø19.0 (3/4")
   FOR MOUNTING FROM OUTSIDE VEHICLE.
2. CAP/NUT TO BE ASSEMBLED WITH A TORQUE OF 4Nm (3lb ft.)

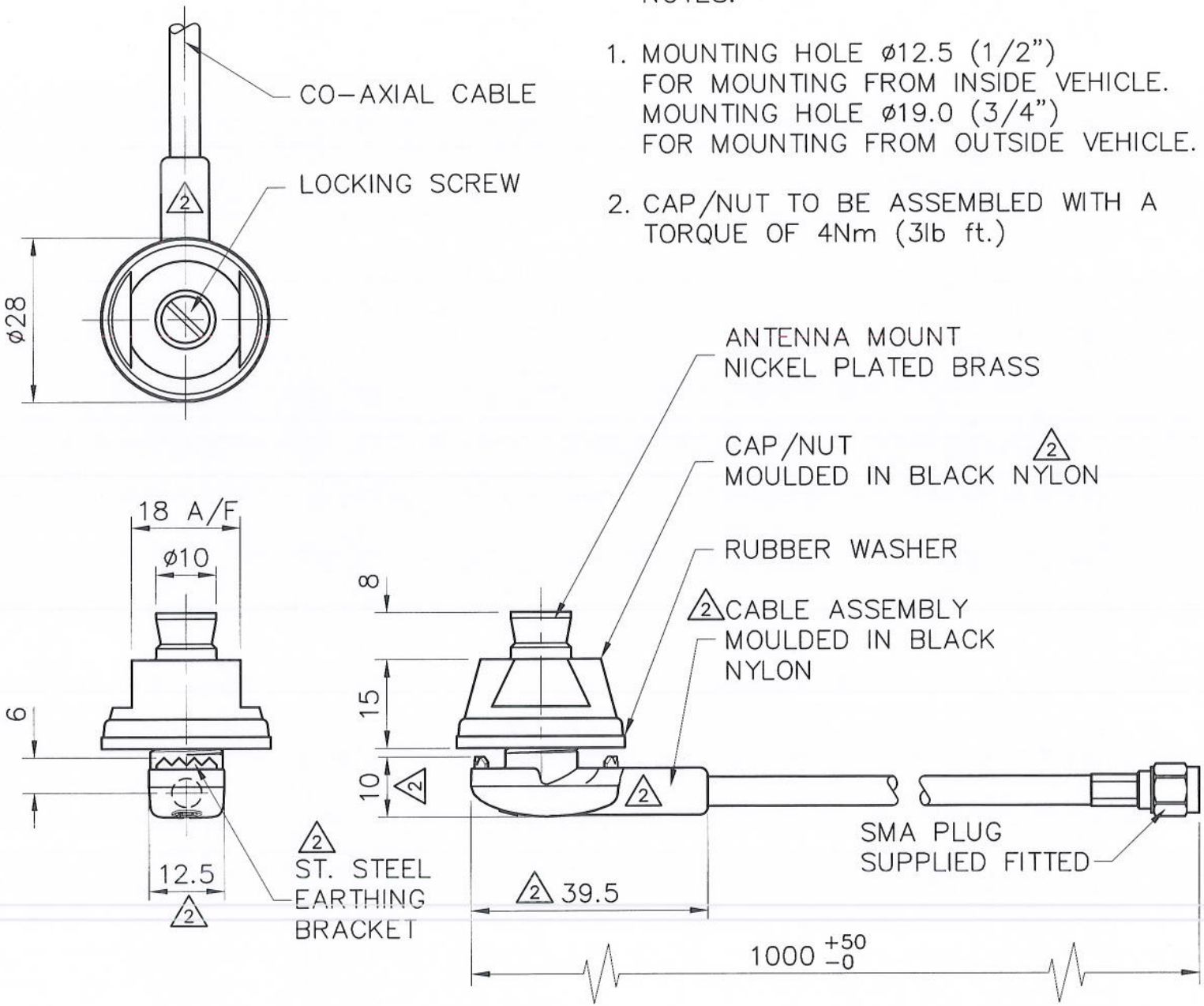

DRG. No.	M8–1SP
TITLE	M8 BASE ASSEMBLY 1m COAX CABLE SMA PLUG FITTED
MATERIAL	
FINISH	
DRAWN A.G.	DO.CHECK K.D.
SCALE 1:1	DIMENSIONS IN mm

TOLERANCES UNLESS OTHERWISE STATED
0 DEC. PLACE ±0.5 2 DEC. PLACES ±0.1
1 DEC. PLACE ±0.2 ANGULAR ±1°

DO NOT SCALE | PROJECTION

C/NOTE	ISSUE	DATE	APPROVAL
01019	1	06.08.14	K.D.
01019	2	29.10.15	KD

△ — DENOTES LATEST ISSUE CHANGES

PANORAMA ANTENNAS

THIS DOCUMENT MUST NOT BE COPIED OR DISCLOSED TO A THIRD PARTY WITHOUT THE WRITTEN CONSENT OF PANORAMA ANTENNAS LTD.

© 2014 A4