THIS DOCUMENT MUST NOT BE COPIED OR DISCLOSED TO A THIRD PARTY WITHOUT THE WRITTEN CONSENT OF PANORAMA ANTENNAS LTD.

DO NOT SCALE

PROJECTION

DRG. No. MFXU–BNC–VAR

PART No.	FREQUENCY RANGE IN MHz	'L' LENGTH IN MM	COLOUR CODE
MFXU–BNC–S	350–392	109 ±6.5	YELLOW
MFXU–BNC–T	390–432	98 ±6.5	RED
MFXU–BNC–U	430–472	88 ±6.5	GREEN
MFXU–BNC–S1	380–400	104 ±6.5	BLACK
MFXU–BNC–W	470–512	85 ±6.5	WHITE
MFXU–BNC–UT	406–472	91 ±6.5	BLUE
MFXU–BNC–R	330–366	119 ±6.5	BLUE
MFXU–BNC–TET	380–430	101 ±6.5	ORANGE
MFXU–BNC–420	△11 400–440	95 ±6.5	WHITE
MFXU–BNC–460	△11 440–480	86 ±6.5	YELLOW

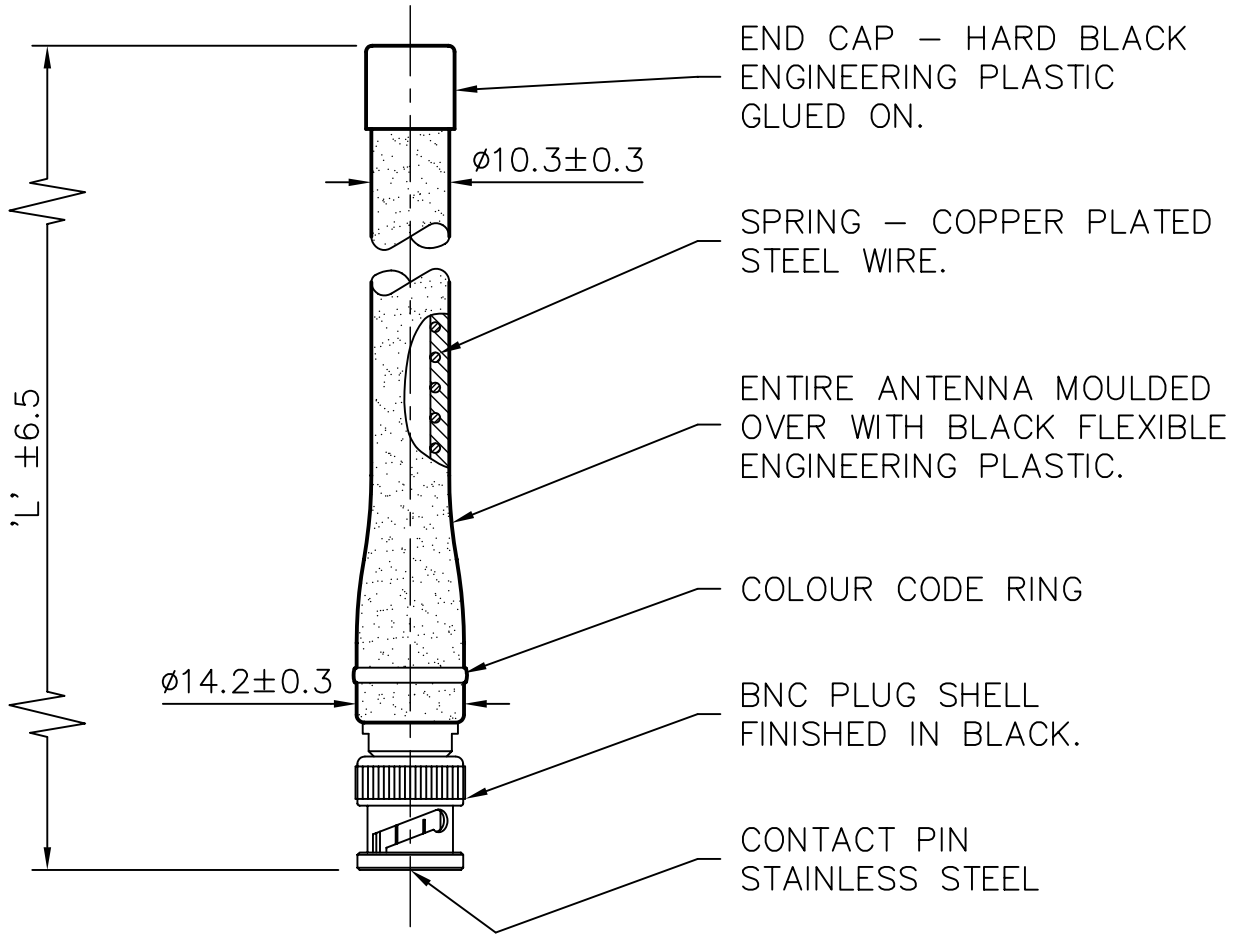

THIS IS A PROPRIETARY ITEM OF PANORAMA ANTENNAS LTD. AND COULD BE SUBJECT TO CHANGE WITHOUT PRIOR NOTICE. THIS ITEM IS RoHS COMPLIANT.

△ – DENOTES LATEST ISSUE CHANGES

ISSUE	DATE	SIGN.
00565	18.11.97	K.D.
01024	25.9.98	K.D.
01019	30.9.03	K.D.
01019	02.02.07	K.D.
01019	24.05.07	K.D.
01019	11.10.07	K.D.

TOLERANCES UNLESS OTHERWISE STATED
ONE DEC. PLACE ±0.2
TWO DEC. PLACES ±0.1
DIMENSIONS IN mm
SCALE 1:1

MATERIAL

FINISH

TITLE
MOULDED HELICAL UHF/BNC BANDS VARIOUS ANTENNAS

DRAWN T.S. | DO.CHECK A.J. | FILE MFXU–BNC–VAR

DRG. No. MFXU–BNC–VAR

PANORAMA ANTENNAS LTD. LONDON

© 1992

A4