THIS IS A PROPRIETARY ITEM OF PANORAMA ANTENNAS LTD. AND COULD BE SUBJECT TO CHANGE WITHOUT PRIOR NOTICE. THIS ITEM IS RoHS COMPLIANT.

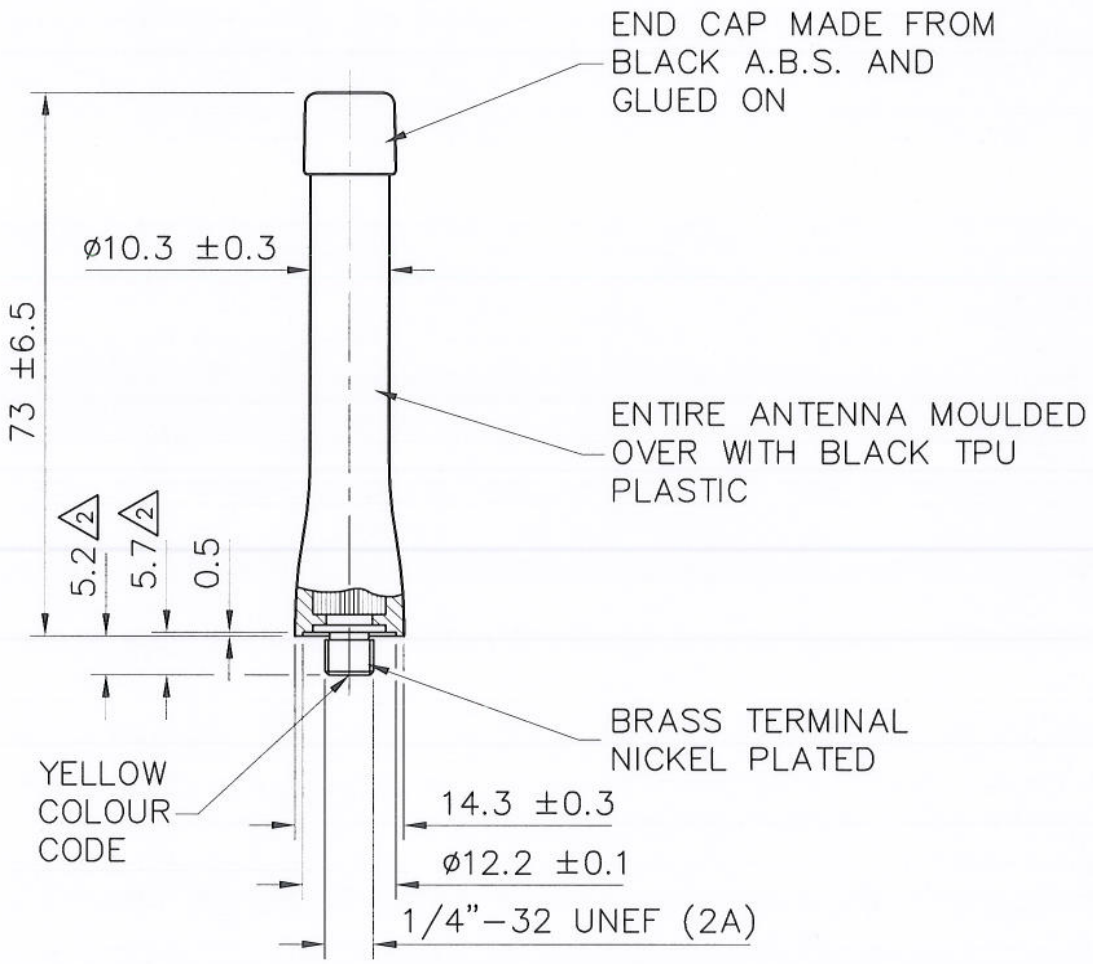

DRG. No.	MFXU–CSP–T1
TITLE	MOULDED HELICAL UHF 1/4"–UNF/CSP 400–430MHz.
MATERIAL	
FINISH	
DRAWN	A.G.
DO.CHECK	K.D.
SCALE	1:1
DIMENSIONS IN	mm

TOLERANCES UNLESS OTHERWISE STATED

0 DEC. PLACE	±0.5	2 DEC. PLACES	±0.1
1 DEC. PLACE	±0.2	ANGULAR	±1°

DO NOT SCALE — PROJECTION

C/NOTE	ISSUE	DATE	APPROVAL
01019	1	21.01.14	K.D.
01019	2	21.04.16	KD

△ — DENOTES LATEST ISSUE CHANGES

PANORAMA ANTENNAS

THIS DOCUMENT MUST NOT BE COPIED OR DISCLOSED TO A THIRD PARTY WITHOUT THE WRITTEN CONSENT OF PANORAMA ANTENNAS LTD.

© 2014

A4