FREQUENCY RANGE:

360 - 512MHz

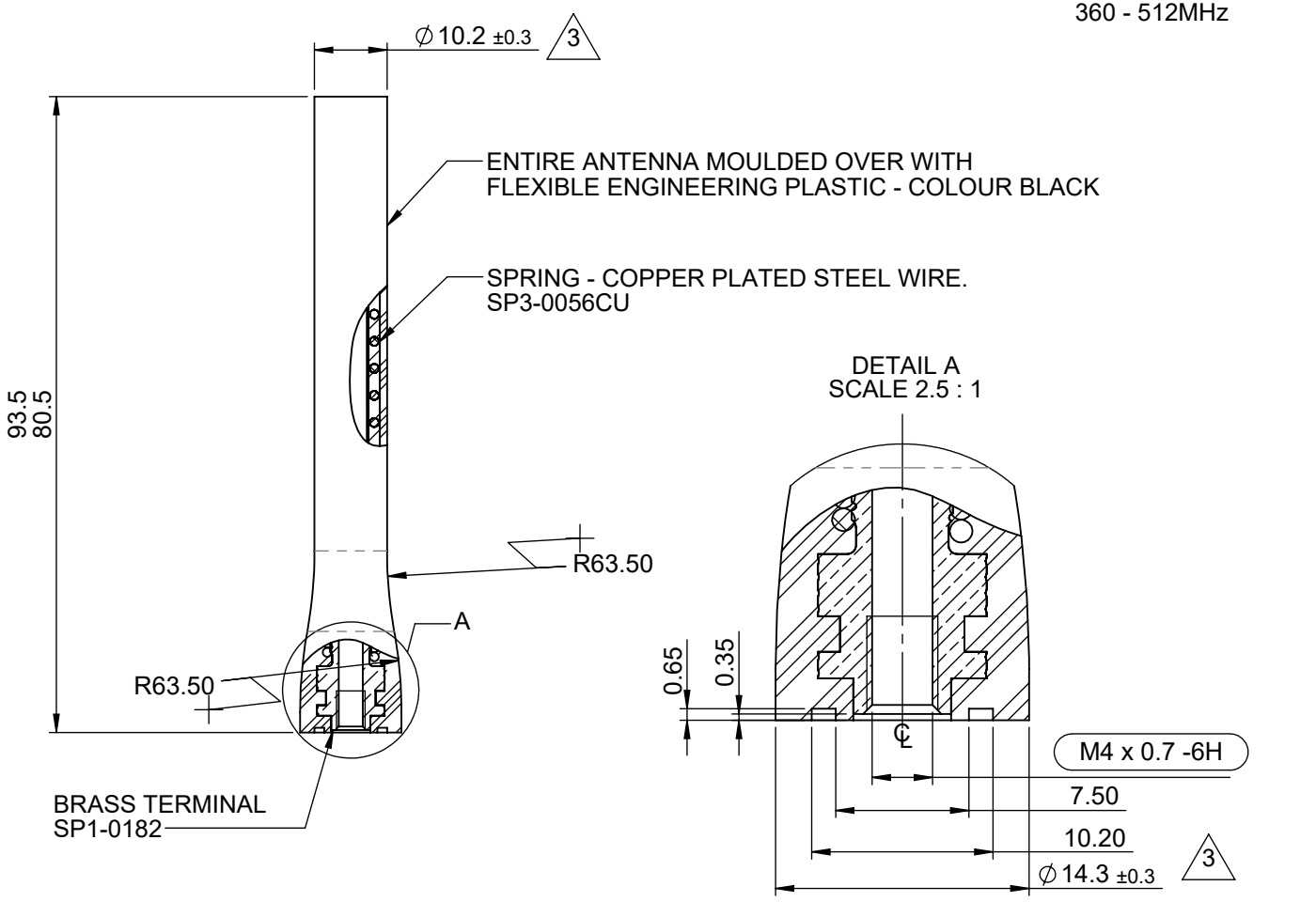

NOTES:

1. SAMPLES MUST BE APPROVED BY PANORAMA ANTENNAS Q.C. BEFORE COMMENCING PRODUCTION.

2. ALL MATERIALS SUPPLIED MUST BE RoHS2 (DIRECTIVE 2011/65/EU) COMPLIANT AND MUST NOT CONTAIN ANY SUBSTANCES OF VERY HIGH CONCERN (SVHCs) LISTED UNDER REACH OR POLY-AROMATIC HYDROCARBONS (PAHs), OR PERSISTENT ORGANIC POLLUTANTS (POPs) CONTROLLED BY THE STOCKHOLM CONVENTION.

DRG. No.	MFXU-M4
SHEET	1 OF 1
PRODUCT/ASSEMBLY	1014 - PORTABLE ANTENNAS
DESCRIPTION	MOULDED HELICAL UHF M4 UNCUT - BLACK
MATERIAL	SEE DRAWING NOTES
FINISH	SEE DRAWING NOTES
WEIGHT	14.62g
APPROVED	PE
DO.CHECK	MM
SCALE	1:1
	DIMENSIONS IN mm
DO NOT SCALE	3RD ANGLE PROJECTION

PCN	REV.	DESCRIPTION	DATE	DRN
01019	3	DRAWN IN SOLIDWORKS	11/09/2018	IC

TOLERANCES UNLESS OTHERWISE STATED			
0 DEC. PLACE	±0.5	2 DEC. PLACES	±0.1
1 DEC. PLACE	±0.2	ANGULAR	±1°

△ DENOTES LATEST ISSUE CHANGES

⬭ DENOTES CRITICAL VALUE

PANORAMA ANTENNAS

THIS DOCUMENT MUST NOT BE COPIED OR DISCLOSED TO A THIRD PARTY WITHOUT THE WRITTEN CONSENT OF PANORAMA ANTENNAS LTD.

© 2016

A4