THIS IS A PROPRIETARY ITEM OF PANORAMA ANTENNAS LTD. AND COULD BE SUBJECT TO CHANGE WITHOUT PRIOR NOTICE.

PART No.	FREQUENCY RANGE IN MHz	'L' LENGTH IN mm	COLOUR CODE
MFXU-MG-S	350-392	86	YELLOW
MFXU-MG-T	390-432	82	RED
MFXU-MG-T1	400-430	80	BLACK
MFXU-MG-U	430-472	70	GREEN
MFXU-MG-UT	406-472	69	BLUE
MFXU-MG-S1	380-400	84	BLACK
MFXU-MG-T2	420-456	68	ORANGE
MFXU-MG-W	470-512	63	WHITE
MFXU-MG-S2	410-430	78	WHITE
8 MFXU-MG-U2	450-512	65	BLACK

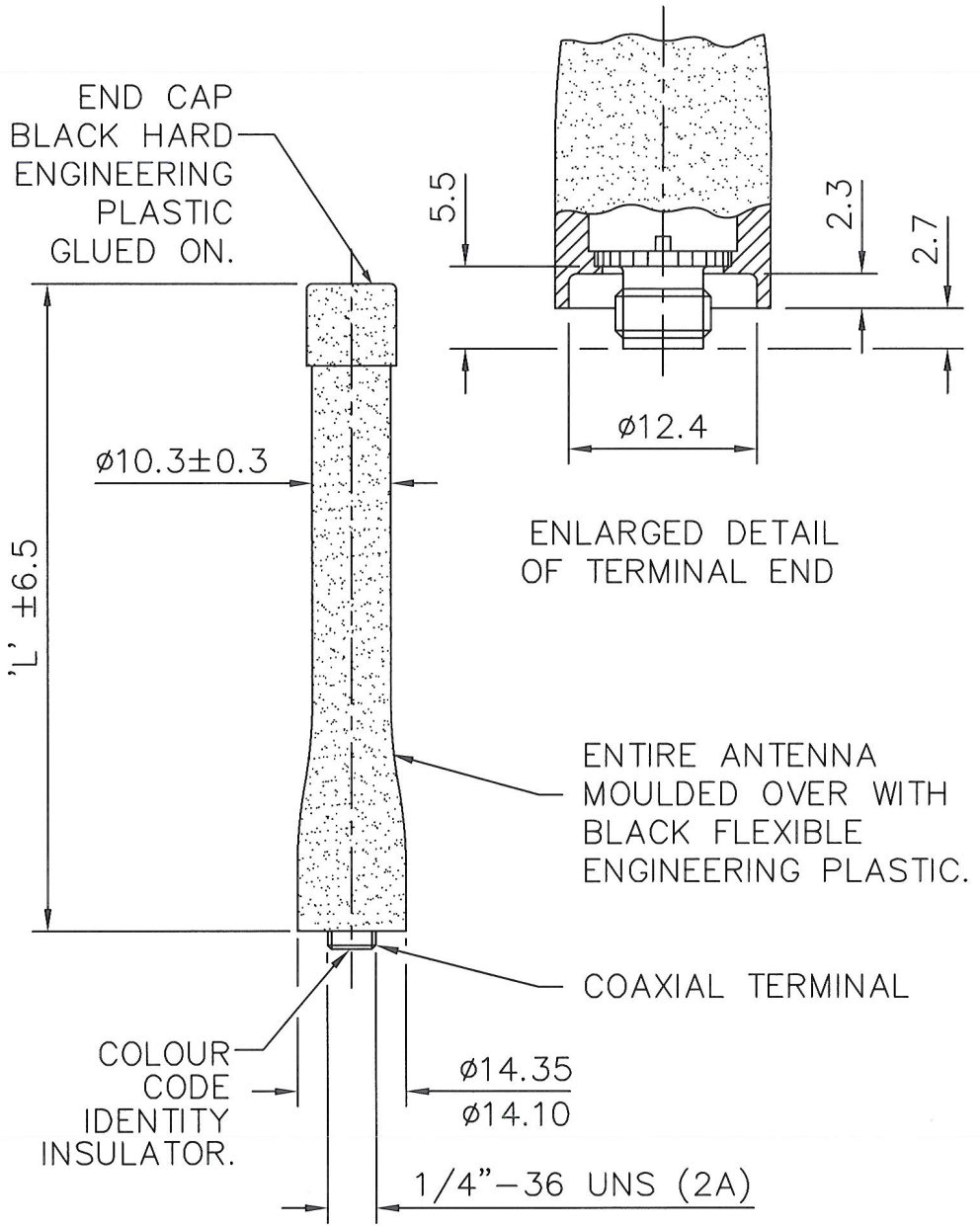

DRG. No. MFXU-MG-VAR

TITLE

MOULDED HELICAL
UHF 1/4"-36 UNS
VARIOUS

MATERIAL

FINISH

DRAWN	M.M.	DO.CHECK	I.C
SCALE	1:1	DIMENSIONS IN mm	

TOLERANCES UNLESS OTHERWISE STATED

0 DEC. PLACE	±0.5	2 DEC. PLACES	±0.1
1 DEC. PLACE	±0.2	ANGULAR	±1°

DO NOT SCALE | PROJECTION

C/NOTE	ISSUE	DATE	APPROVAL
01019	1	12.10.96	K.D.
01389	2	11.03.97	A.J.
00565	3	06.06.00	K.D.
00565	4	15.01.01	K.D.
01024	5	04.05.01	K.D.
00565	6	29.08.01	K.D.
00565	7	04.01.07	K.D.
01019	8	22.02.18	K.D.

△ — DENOTES LATEST ISSUE CHANGES

PANORAMA ANTENNAS

THIS DOCUMENT MUST NOT BE COPIED OR DISCLOSED TO A THIRD PARTY WITHOUT THE WRITTEN CONSENT OF PANORAMA ANTENNAS LTD.

© 2017

A4