THIS DOCUMENT MUST NOT BE COPIED OR DISCLOSED TO A THIRD PARTY WITHOUT THE WRITTEN CONSENT OF PANORAMA ANTENNAS LTD.

DO NOT SCALE

PROJECTION

DRG. No. MFXU-MX-VAR

PART No.	FREQUENCY RANGE IN MHz	'L' LENGTH IN MM	COLOUR CODE
MFXU-MX-S	350-392	82	YELLOW
MFXU-MX-T	390-432	78	RED
MFXU-MX-U	430-472	72	GREEN
MFXU-MX-W	470-512	65	WHITE
MFXU-MX-T1	400-430	75	YELLOW
MFXU-MX-UT	406-472	73	BLUE
MFXU-MX-S4	450-470	67	YELLOW

THIS IS A PROPRIETARY ITEM OF PANORAMA ANTENNAS LTD. AND COULD BE SUBJECT TO CHANGE WITHOUT PRIOR NOTICE. THIS ITEM IS RoHS COMPLIANT.

△ – DENOTES LATEST ISSUE CHANGES

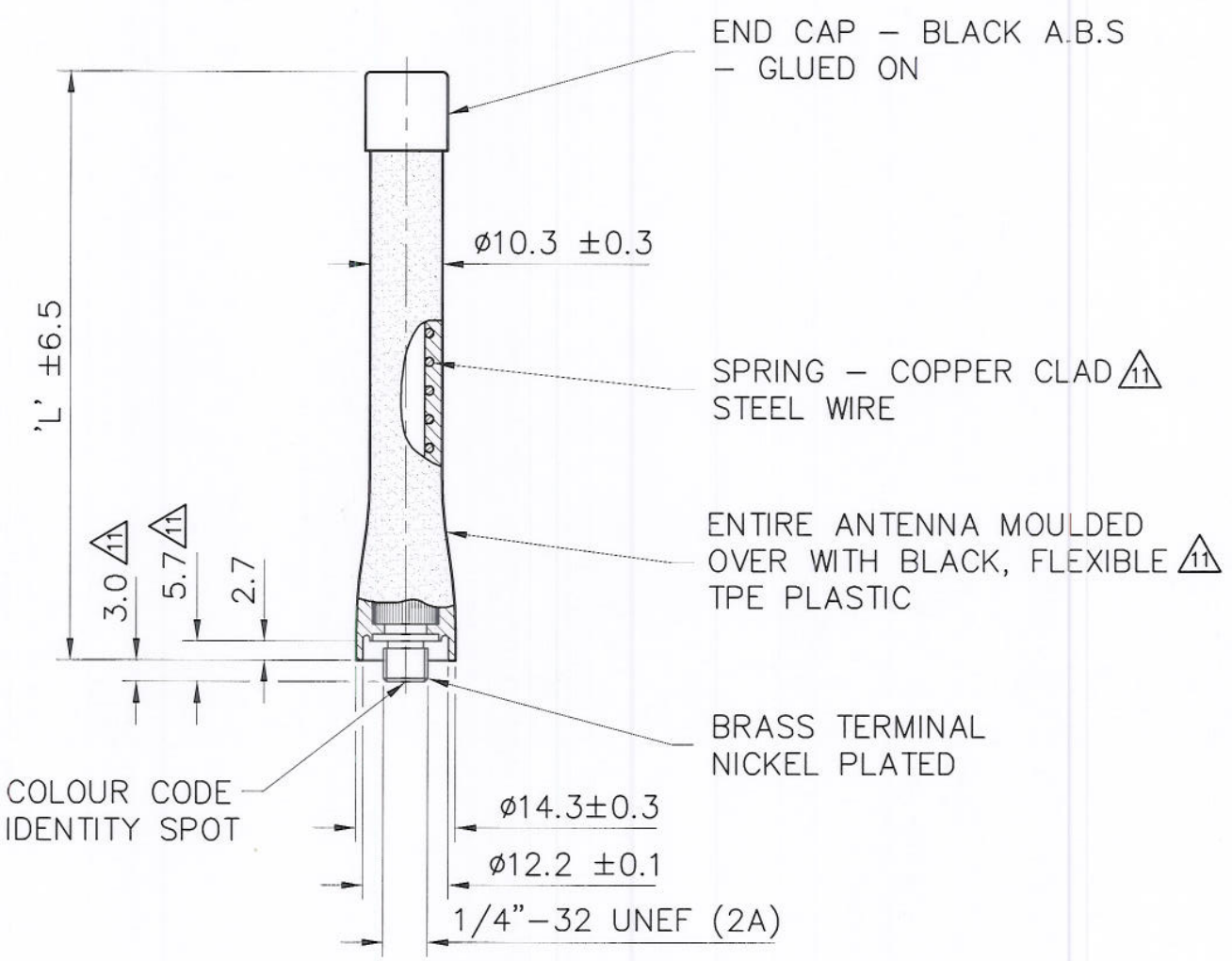

	ISSUE	DATE	SIGN.
	6	23.7.92	A.J.
00565	7	1.10.97	K.D.
01019	8	11.01.08	K.D.
01019	9	10.03.08	K.D.
01019	10	16.04.13	K.D.
01019	11	26.04.16	KD

TOLERANCES UNLESS OTHERWISE STATED
ONE DEC. PLACE ±0.2
TWO DEC. PLACES ±0.1
DIMENSIONS IN mm
SCALE 1:1

MATERIAL

FINISH

TITLE: MOULDED HELICAL UHF 1/4" UNEF BAND S,T,& U

DRAWN T.S. | DO.CHECK A.J. | FILE MFXU-MX-VAR

DRG. No. MFXU-MX-VAR

PANORAMA ANTENNAS LTD. LONDON

© 1992

A4