DRG. No.	MFXU-SMAFR-VAR	© 2018 A4 THIS DOCUMENT MUST NOT BE COPIED OR DISCLOSED TO A THIRD PARTY WITHOUT THE WRITTEN CONSENT OF PANORAMA ANTENNAS LTD.	DO NOT SCALE	DENOTES LATEST ISSUE CHANGES	DENOTES CRITICAL VALUE	PROJECTION

TOLERANCES UNLESS OTHERWISE STATED			
0 DEC. PLACE	±0.5	2 DEC. PLACES	±0.1
1 DEC. PLACE	±0.2	ANGULAR	±1°

PART No.	FREQ. RANGE	LENGTH "L" mm	COLOUR CODE
MFXU-SMAFR-T	390-432MHz	80	RED
MFXU-SMAFR-U	430-472MHz	70	GREEN
MFXU-SMAFR-S1	380-400MHz	86	BLACK
MFXU-SMAFR-S2	410-430MHz	75	WHITE
MFXU-SMAFR-UT	406-472MHz	74	BLUE
MFXU-SMAFR-W	470-512MHz	64	WHITE
MFXU-SMAFR-TET	380-430MHz	81	ORANGE
MFXU-SMAFR-U2	450-512MHz	67	BLACK
MFXU-SMAFR-T2	420-456MHz	73	ORANGE
MFXU-SMAFR-S4	450-470MHz	68	YELLOW

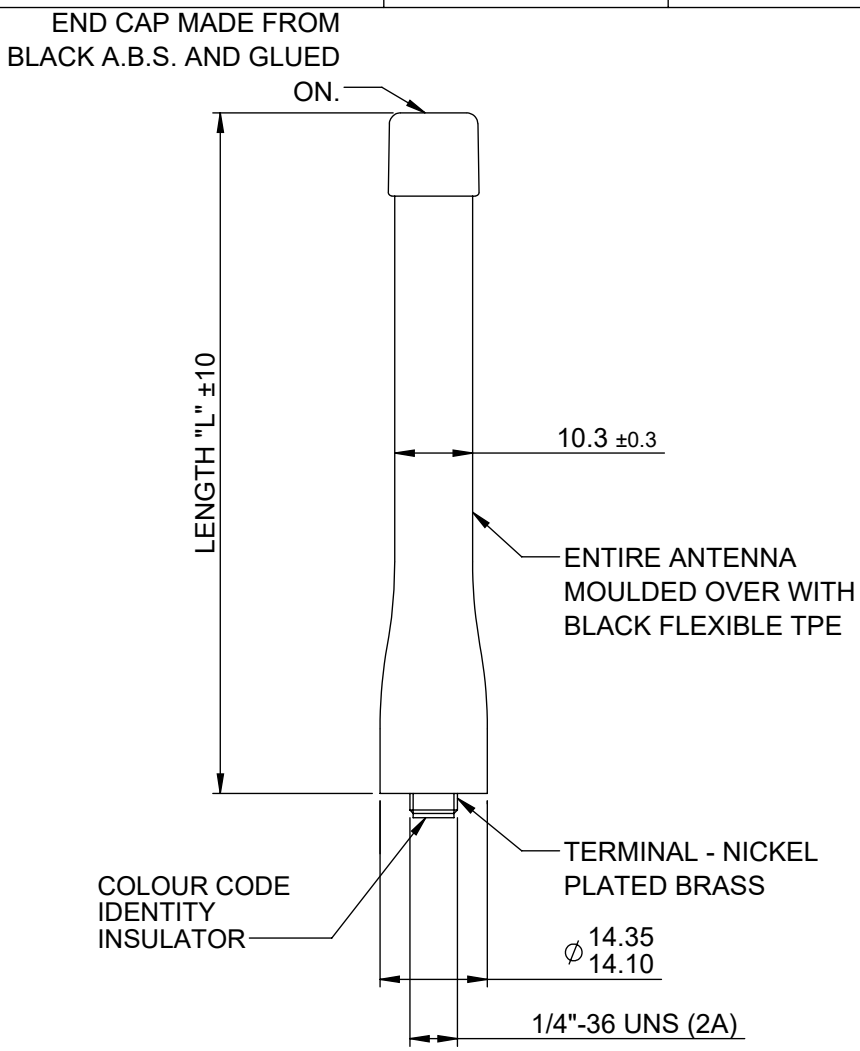

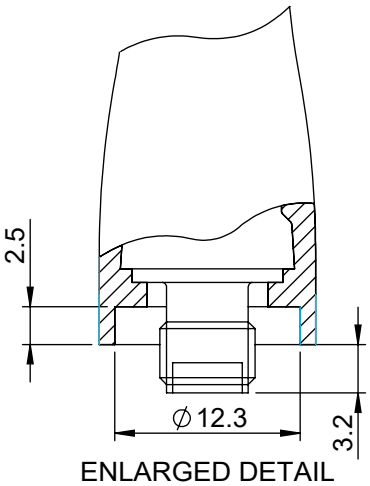

ENLARGED DETAIL OF TERMINAL END

NOTES:

1. SAMPLES MUST BE APPROVED BY PANORAMA ANTENNAS Q.C. BEFORE COMMENCING PRODUCTION.
2. ALL MATERIALS SUPPLIED MUST BE RoHS2 (DIRECTIVE 2011/65/EU) COMPLIANT AND MUST NOT CONTAIN ANY SUBSTANCES OF VERY HIGH CONCERN (SVHCs) LISTED UNDER REACH OR POLY-AROMATIC HYDROCARBONS (PAHs), OR PERSISTENT ORGANIC POLLUTANTS (POPs) CONTROLLED BY THE STOCKHOLM CONVENTION.

PCN	REV.	DESCRIPTION	DATE	DRN.
01019	8	DRAWN IN SOLIDWORKS. S4 VERSION ADDED.	04/09/2018	IC

PRODUCT/ASSEMBLY: 1014 - PORTABLE ANTENNAS
MATERIAL: N/A
FINISH: N/A
WEIGHT N/A
SHEET 1 OF 1

DESCRIPTION: MFXU MOULDED HEL. ANTENNA SMA FEMALE RECESSED - VARIOUS LENGTHS

APPROVED	D.O.CHECK	SCALE	DIMENSIONS IN mm
PE	MM	1:1	

PANORAMA ANTENNAS