PART No.	FREQUENCY RANGE	'L' LENGTH IN mm
MFXU-SMAMO-R	330-366	93
MFXU-SMAMO-S	350-392	81
MFXU-SMAMO-UT	406-472	66
MFXU-SMAMO-U	430-472	62
MFXU-SMAMO-T	390-432	70
MFXU-SMAMO-433	433	68
MFXU-SMAMO-T2	420-456	68
MFXU-SMAMO-W	470-512	56
MFXU-SMAMO-S4	450-470	61

9

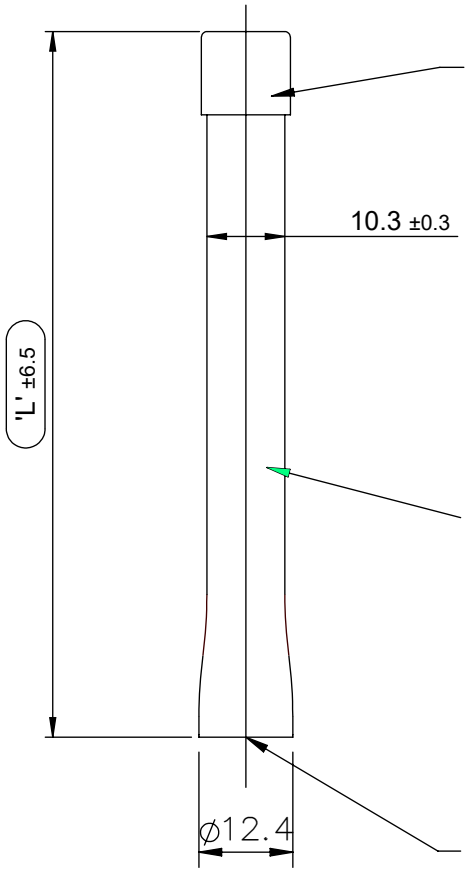

END CAP MADE FROM BLACK ENGINEERING PLASTIC GLUED ON

ENTIRE ANTENNA MOULDED OVER WITH BLACK FLEXIBLE ENGINEERING PLASTIC

SMA PLUG

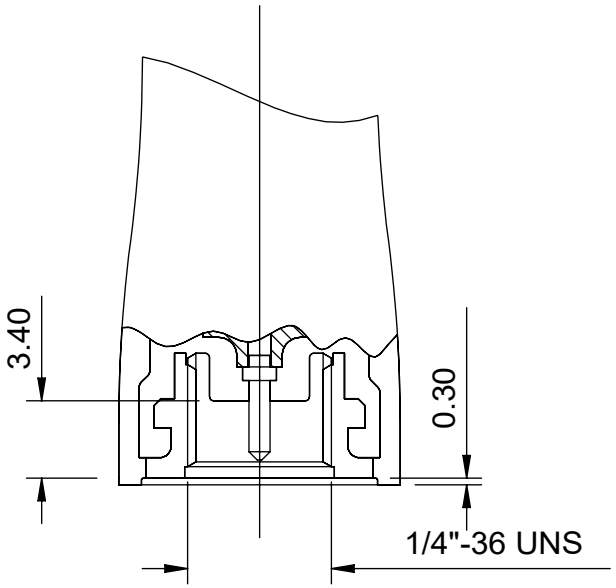

ENLARGED DETAIL OF TERMINAL END

NOTES:

1. SAMPLES MUST BE APPROVED BY PANORAMA ANTENNAS Q.C. BEFORE COMMENCING PRODUCTION.

2. ALL MATERIALS SUPPLIED MUST BE RoHS2 (DIRECTIVE 2011/65/EU) COMPLIANT AND MUST NOT CONTAIN ANY SUBSTANCES OF VERY HIGH CONCERN (SVHCs) LISTED UNDER REACH OR POLY-AROMATIC HYDROCARBONS (PAHs), OR PERSISTENT ORGANIC POLLUTANTS (POPs) CONTROLLED BY THE STOCKHOLM CONVENTION.

DRG No. MFXU-SMAMO-VAR | SHEET 1 OF 1

PRODUCT/ASSEMBLY: 1014 - PORTABLE ANTENNAS

DESCRIPTION: MFXU ANTENNA SMA PLUG 0.2mm SKIRT ORCA - VAR

MATERIAL: N/A

FINISH: N/A

WEIGHT: N/A

APPROVED	KD	DO.CHECK	MM
SCALE	1:1	DIMENSIONS IN mm	

DO NOT SCALE | 3RD ANGLE PROJECTION

PCN	REV.	DESCRIPTION	DATE	DRN
01019	1	MFXU-SMAMO-S4 ADDED	07/06/2017	IC

TOLERANCES UNLESS OTHERWISE STATED

0 DEC. PLACE	±0.5	2 DEC. PLACES	±0.1
1 DEC. PLACE	±0.2	ANGULAR	±1°

△ DENOTES LATEST ISSUE CHANGES | ⬭ DENOTES CRITICAL VALUE

PANORAMA ANTENNAS

THIS DOCUMENT MUST NOT BE COPIED OR DISCLOSED TO A THIRD PARTY WITHOUT THE WRITTEN CONSENT OF PANORAMA ANTENNAS LTD.

© 2017

A4