MFXU-SMAMO-VAR

Private Mobile Radio

21/09/2015 v.1



Portable UHF Helical Antenna

Rugged design

Pre-tuned to frequency

Colour coded

Panorama offers a comprehensive range of portable antennas. The MFXU-SMAMO-VAR is overmoulded in TPU or TPE which improves the durability of the antenna without affecting electrical performance
Each pre-tuned frequency band has its own colour code making it easy to identify the correct product.

Technical Drawing

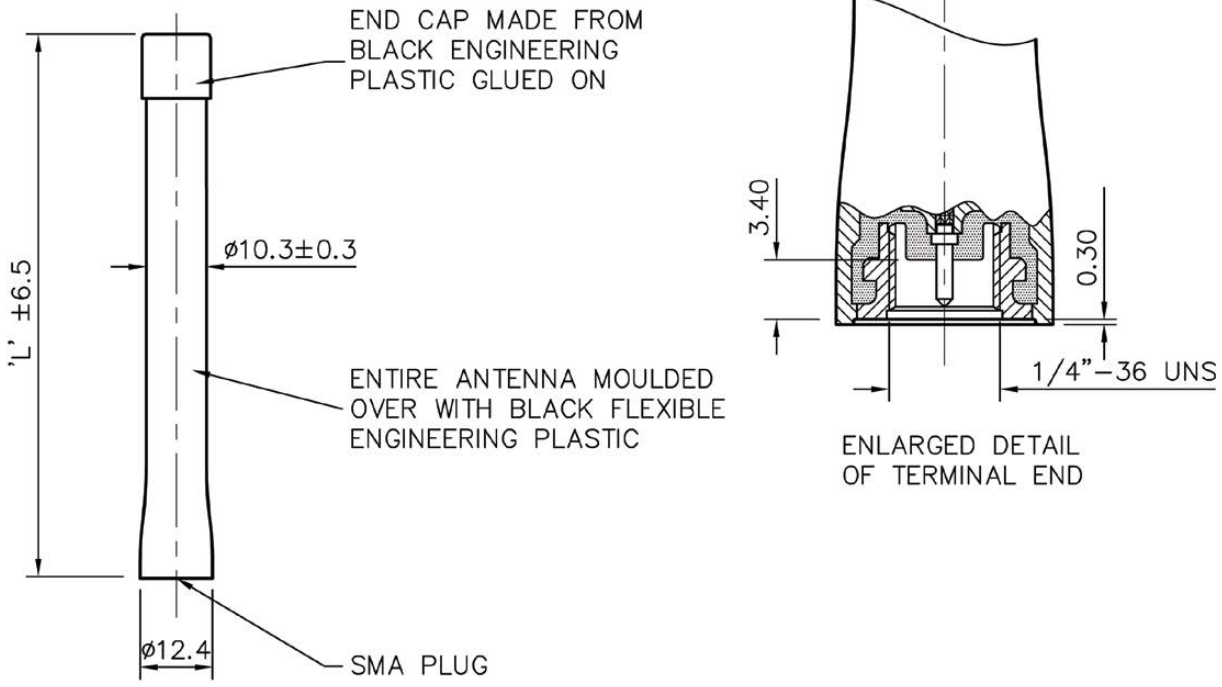

PANORAMA ANTENNAS

Panorama Antennas Ltd
Frogmore, London, SW18 1HF, United Kingdom

T: +44 (0)20 8877 4444
F: +44 (0)20 8877 4477
E: sales@panorama-antennas.com
www.panorama-antennas.com

Waiver: The data given above is indicative of the performance of the product/s under particular conditions and does not imply a guarantee of performance. These specifications are subject to change without notice.
Copyright © Panorama Antennas Ltd. All rights reserved.

Product Data

Part No.		MFXU-SMAMO-S1	MFXU-SMAMO-S2	MFXU-SMAMO-TET	MFXU-SMAMO-U	MFXU-SMAMO-W
Electrical Data						
Frequency Range (MHz)		380-400	410-430	380-430	430-470	470-520
Operational Band				R		
VSWR (Typical)				< 2.3 : 1		
Gain: Isotropic (Typical)				1dBi		
Compared to ¼ wave (Typical)				-1dB		
Impedance				50Ω		
Max Input Power (W)				25		
Mechanical Data						
Dimensions (mm)	Length			93 (3.66”)		
	Diameter			12.4 (0.48”)		
Operating Temp (°C)				-40° / +80°C (-40° /180°f)		
Material				TPU or TPE		
Colour Coding				Black		
Connector						
Type				SMA (male)		

VSWR

Typical H plane (348MHz)

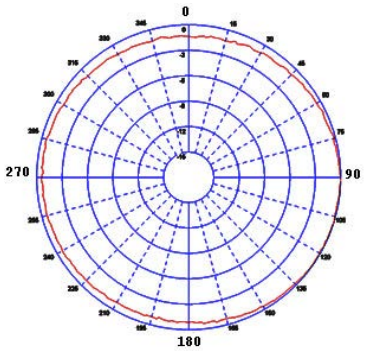

Typical VSWR

