THIS DOCUMENT MUST NOT BE COPIED OR DISCLOSED TO A THIRD PARTY WITHOUT THE WRITTEN CONSENT OF PANORAMA ANTENNAS LTD.

© 1999 A4

DO NOT SCALE

PROJECTION

DRG. No. MFXU–TNC–VAR

PART No.	FREQUENCY RANGE IN MHz	'L' LENGTH IN mm	COLOUR CODE
MFXU–TNC–R	330–366	102 ±6.5	BLUE
MFXU–TNC–S	350–392	95 ±6.5	YELLOW
MFXU–TNC–S1	380–400	93 ±6.5	BLACK
MFXU–TNC–T	390–432	90 ±6.5	RED
MFXU–TNC–U	430–472	80 ±6.5	GREEN
MFXU–TNC–W	470–512	70 ±6.5	WHITE
MFXU–TNC–T2	420–456	83 ±6.5	ORANGE
MFXU–TNC–TET	380–430	91 ±6.5	ORANGE
MFXU–TNC–S4	450–470	77 ±6.5	YELLOW
10 MFXU–TNC–S2	410–430	87 ±6.5	WHITE

THIS IS A PROPRIETARY ITEM OF PANORAMA ANTENNAS LTD. AND COULD BE SUBJECT TO CHANGE WITHOUT PRIOR NOTICE. THIS ITEM IS RoHS COMPLIANT.

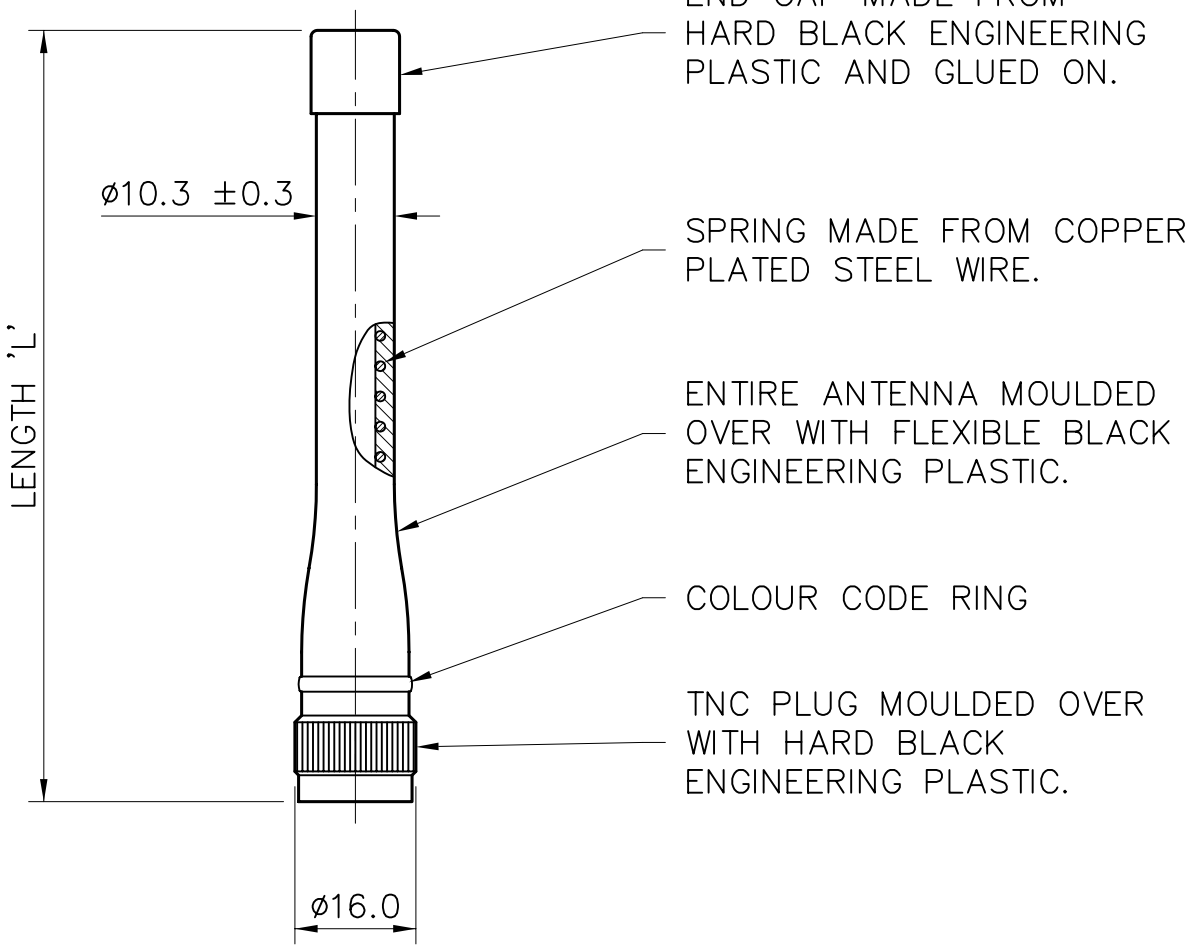

△ — DENOTES LATEST ISSUE CHANGES

C/NOTE	ISSUE	DATE	APPROVAL
00565	5	22.1.99	K.D.
00565	6	16.10.01	K.D.
01019	7	30.9.03	K.D.
01019	8	24.05.07	K.D.
01019	9	16.06.11	K.D.
01019	10	22.08.12	K.D.

TOLERANCES UNLESS OTHERWISE STATED
0 DEC. PLACE ±0.5 2 DEC. PLACES ±0.1
1 DEC. PLACE ±0.2 ANGULAR ±1°

DRAWN T.S. | DO.CHECK A.J.

SCALE 1:1 | DIMENSIONS IN mm

FILE MFXU–TNC–VAR

TITLE MOULDED HELICAL UHF–TNC ANTENNA – VARIOUS

MATERIAL | FINISH

PANORAMA ANTENNAS