PART No.	FREQUENCY RANGE	'L' LENGTH IN mm
MFXU–VX410–R	330–366	97
MFXU–VX410–S	350–392	85
MFXU–VX410–UT	406–472	70
MFXU–VX410–U	430–472	66
MFXU–VX410–T	390–432	74
MFXU–VX410–433	433	72
MFXU–VX410–T2	420–456	72
MFXU–VX410–W	470–512	60

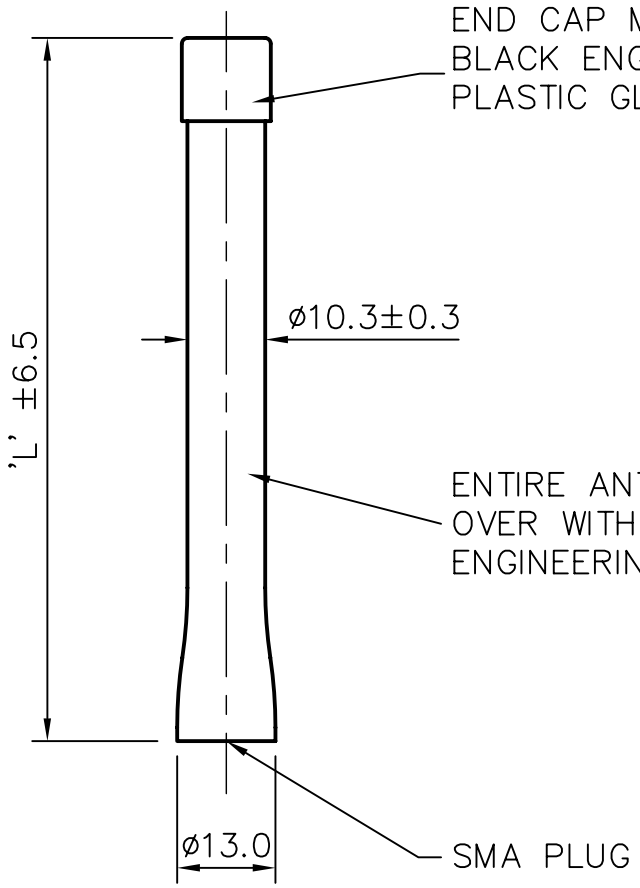

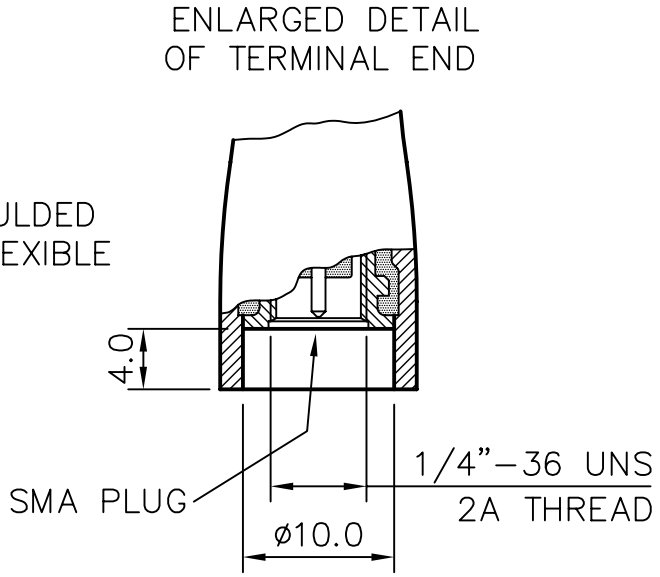

THIS IS A PROPRIETARY ITEM OF PANORAMA ANTENNAS LTD. AND COULD BE SUBJECT TO CHANGE WITHOUT PRIOR NOTICE. THIS ITEM IS RoHS COMPLIANT.

DRG. No. MFXU–VX410–VAR

TITLE

MFXU ANTENNA
VX410 – VARIOUS

MATERIAL

FINISH

DRAWN	T.S.	DO.CHECK	K.D.
SCALE	1:1	DIMENSIONS IN mm	

TOLERANCES UNLESS OTHERWISE STATED

0 DEC. PLACE ±0.5 2 DEC. PLACES ±0.1

1 DEC. PLACE ±0.2 ANGULAR ±1°

DO NOT SCALE | PROJECTION

C/NOTE	ISSUE	DATE	APPROVAL
01019	1	6.2.07	K.D.

△ — DENOTES LATEST ISSUE CHANGES

PANORAMA ANTENNAS

THIS DOCUMENT MUST NOT BE COPIED OR DISCLOSED TO A THIRD PARTY WITHOUT THE WRITTEN CONSENT OF PANORAMA ANTENNAS LTD.

© 2007

A4