THIS IS A PROPRIETARY ITEM OF PANORAMA ANTENNAS LTD. AND COULD BE SUBJECT TO CHANGE WITHOUT PRIOR NOTICE. THIS ITEM IS RoHS COMPLIANT.

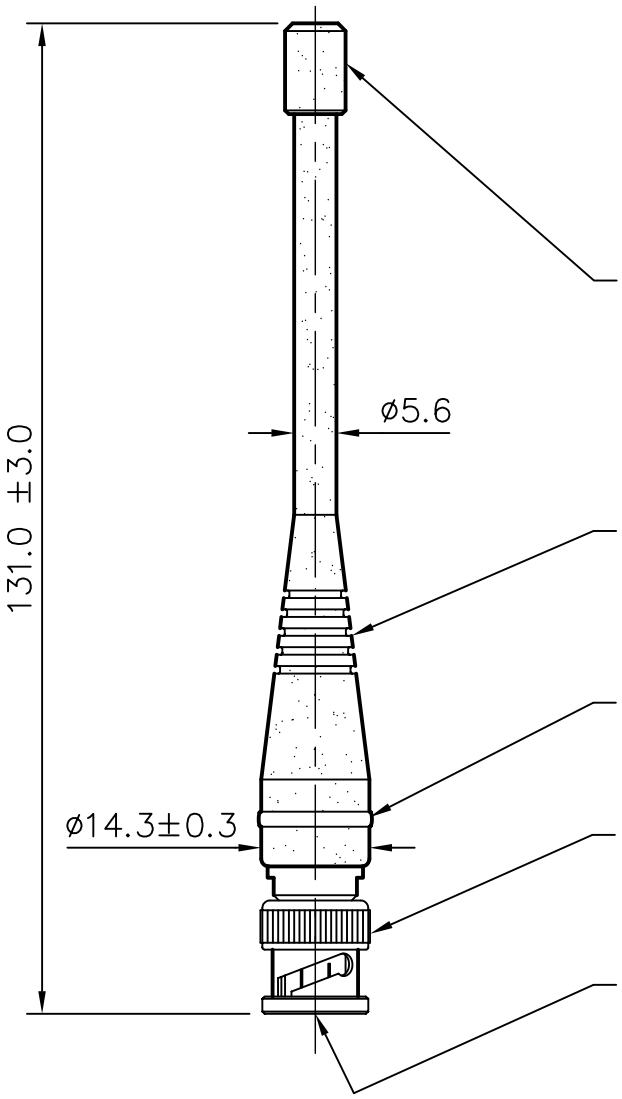

END CAP – BLACK ENGINEERING PLASTIC BONDED ON.

ENTIRE ANTENNA MOULDED OVER WITH FLEXIBLE BLACK ENGINEERING PLASTIC.

BLACK COLOUR CODE RING

BNC PLUG SHELL FINISHED IN BLACK.

CONTACT PIN STAINLESS STEEL

DRG. No.	MQ–BNC–605
TITLE	MOULDED FLEXIBLE BNC PLUG ANTENNA 605 MHz.
MATERIAL	
FINISH	
DRAWN	B.L.
DO.CHECK	K.D.
SCALE	1:1
	DIMENSIONS IN mm

TOLERANCES UNLESS OTHERWISE STATED

0 DEC. PLACE	±0.5	2 DEC. PLACES	±0.1
1 DEC. PLACE	±0.2	ANGULAR	±1°

DO NOT SCALE | PROJECTION

C/NOTE	ISSUE	DATE	APPROVAL
01019	1	05.06.07	K.D.

△ — DENOTES LATEST ISSUE CHANGES

PANORAMA ANTENNAS

THIS DOCUMENT MUST NOT BE COPIED OR DISCLOSED TO A THIRD PARTY WITHOUT THE WRITTEN CONSENT OF PANORAMA ANTENNAS LTD.

© 2007

A4