THIS DOCUMENT MUST NOT BE COPIED OR DISCLOSED TO A THIRD PARTY WITHOUT THE WRITTEN CONSENT OF PANORAMA ANTENNAS LTD.

© 2006 A4

DO NOT SCALE

PROJECTION

DRG. No. MQ-BNC-VAR

PART No.	FREQUENCY RANGE IN MHz	'L' LENGTH IN MM	COLOUR CODE
MQ-BNC-S	350-392	204	YELLOW
MQ-BNC-S1	380-400	198	BLACK
MQ-BNC-T	390-432	191	RED
MQ-BNC-U	430-472	177	GREEN
MQ-BNC-W	470-512	164	WHITE
MQ-BNC-TET	380-430	194	ORANGE
△7 MQ-BNC-S4	450-470	173	YELLOW

THIS IS A PROPRIETARY ITEM OF PANORAMA ANTENNAS LTD. AND COULD BE SUBJECT TO CHANGE WITHOUT PRIOR NOTICE. THIS ITEM IS RoHS COMPLIANT.

△ — DENOTES LATEST ISSUE CHANGES

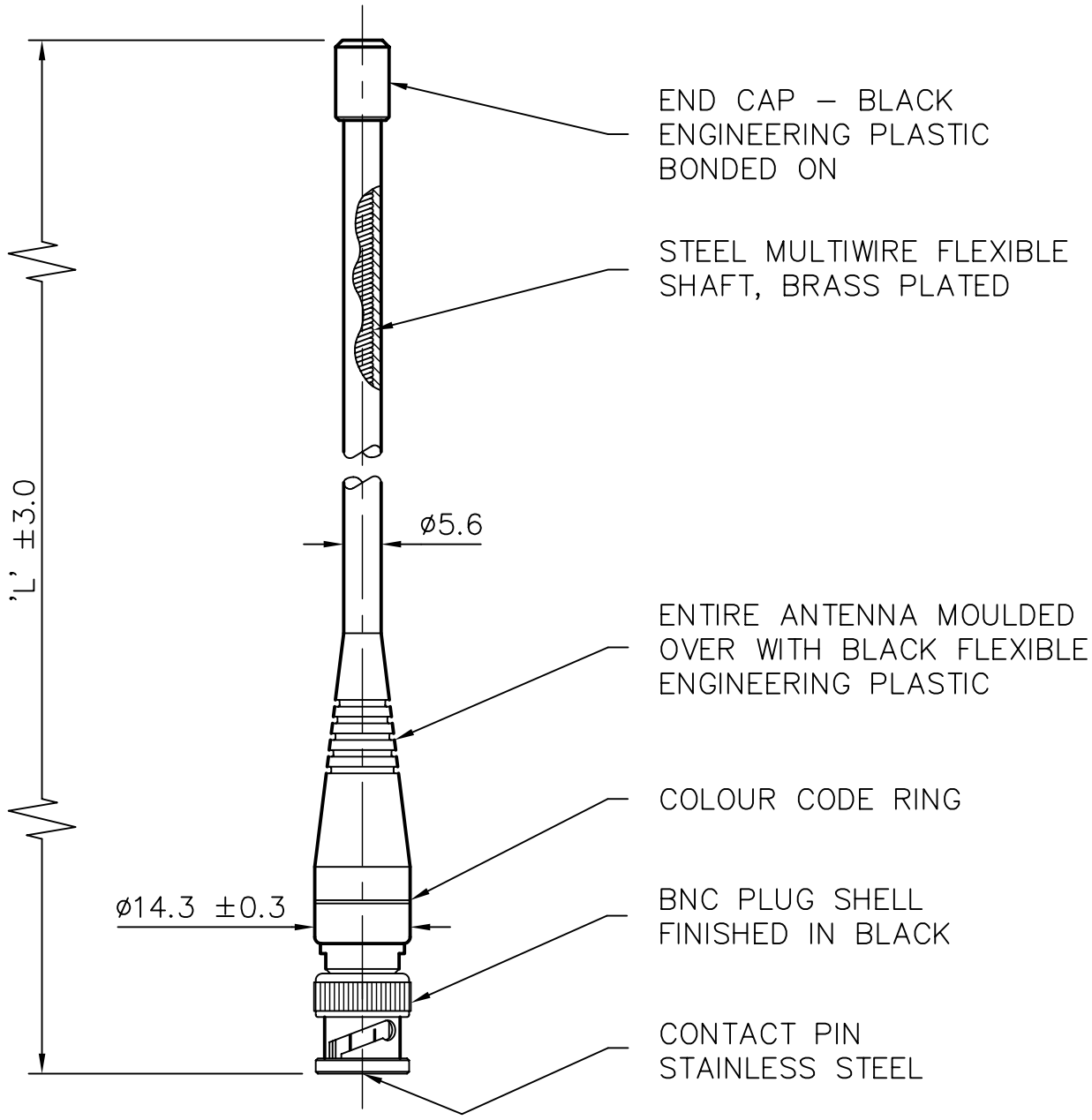

C/NOTE	ISSUE	DATE	APPROVAL
	2	14.4.92	A.J.
	3	23.7.92	A.J.
00565	4	16.7.03	K.D.
00565	5	7.3.06	K.D.
00565	6	2.11.06	K.D.
01019	7	16.12.08	K.D.

TOLERANCES UNLESS OTHERWISE STATED
0 DEC. PLACE ±0.5 2 DEC. PLACES ±0.1
1 DEC. PLACE ±0.2 ANGULAR ±1°

MATERIAL

FINISH

TITLE

MOULDED FLEXIBLE UHF BNC PLUG ANTENNA

DRAWN	DO.CHECK	SCALE	DIMENSIONS IN mm
T.S.	A.J.	1:1	

PANORAMA ANTENNAS