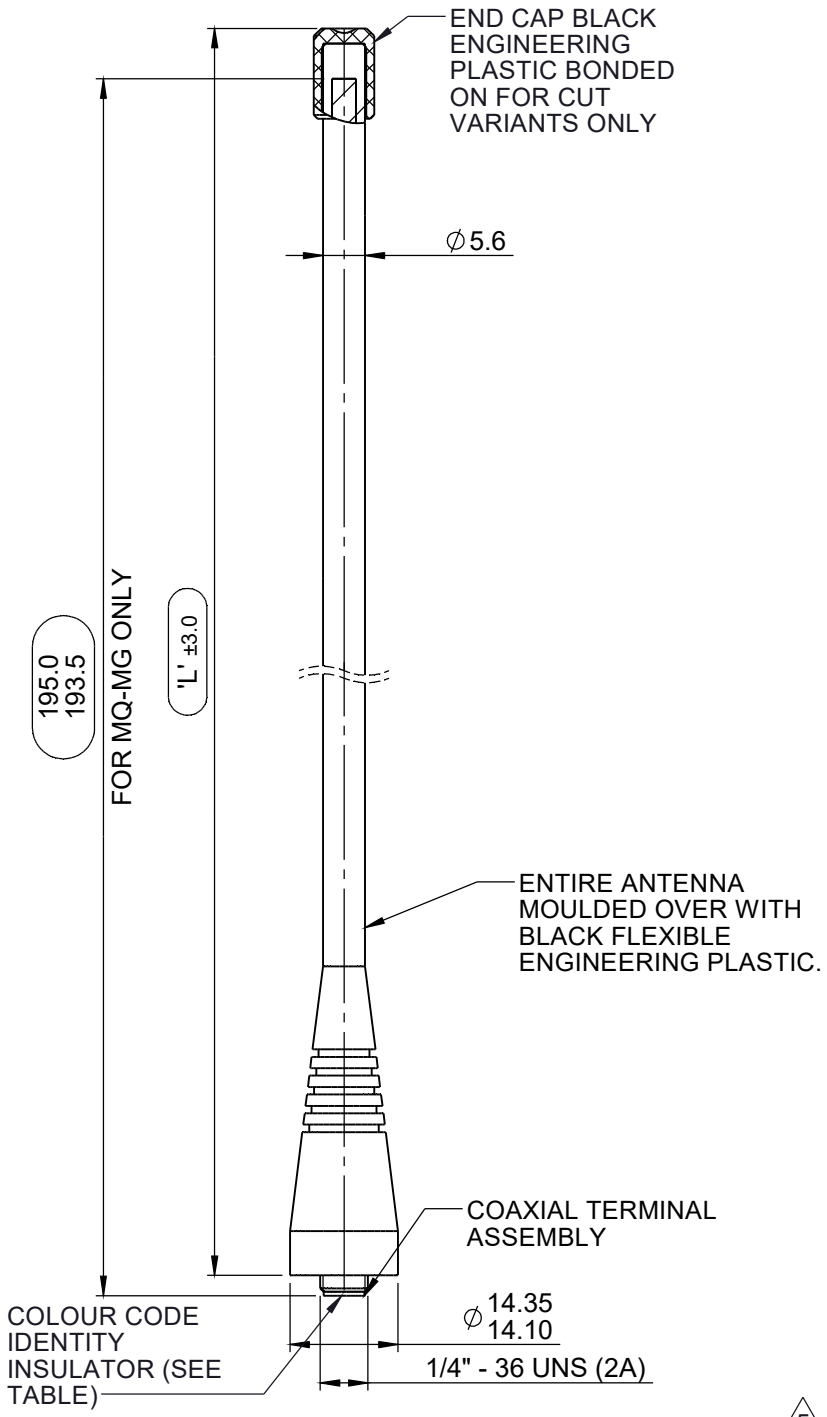

NOTES:

1. SAMPLES MUST BE APPROVED BY PANORAMA ANTENNAS Q.C. BEFORE COMMENCING PRODUCTION.
2. ALL MATERIALS SUPPLIED MUST BE RoHS3 (DIRECTIVE (EU) 2015/863) COMPLIANT AND MUST NOT CONTAIN ANY SUBSTANCES OF VERY HIGH CONCERN (SVHCs) LISTED UNDER REACH OR POLY-AROMATIC HYDROCARBONS (PAHs), OR PERSISTENT ORGANIC POLLUTANTS (POPs) CONTROLLED BY THE STOCKHOLM CONVENTION.

△5

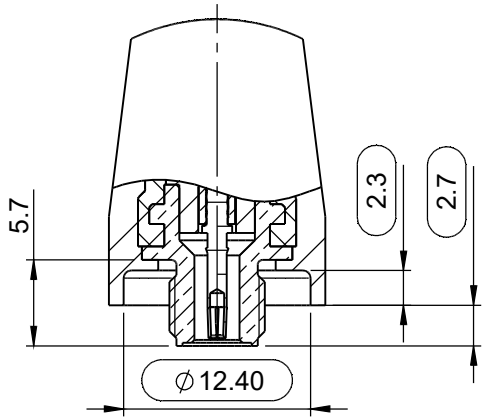

ENLARGED DETAIL OF TERMINAL END

PART NUMBER	FREQUENCY RANGE (MHz)	'L' LENGHT (mm)	COLOUR CODE	WEIGHT (g)
MQ-MG	-	197	BLACK	12
MQ-MG-S	350-392	190	YELLOW	12
MQ-MG-T	390-432	177	RED	11
MQ-MG-U	430-472	163	GREEN	10
MQ-MG-W	470-512	150	WHITE	10
MQ-MG-UT	406-472	172	BLUE	11
MQ-MG-WR	470-530	147	BLACK	9
MQ-MG-U2	450-512	153	BLACK	9

△5

DRG. No. MQ-MG-VAR | SHEET 1 OF 2

PRODUCT/ASSEMBLY: 1014 - PORTABLE ANTENNAS

DESCRIPTION: MOULD 1/4W 1/4" - 36UNS /SKIRT VARIOUS LENGTHS

MATERIAL: N/A

FINISH: N/A

WEIGHT: SEE TABLEg

APPROVED	KD	DO.CHECK	CL
SCALE	1:1	DIMENSIONS IN mm	

DO NOT SCALE | 3RD ANGLE PROJECTION

PCN	REV.	DESCRIPTION	DATE	DRN
01019	-WIP	INITIAL ISSUE		MM
01019	3	CREATE IN 3D	16/03/2018	MM
01019	5	VAR CREATED, - U2 VARIANT ADDED	14/06/2019	AR

TOLERANCES UNLESS OTHERWISE STATED

0 DEC. PLACE	±0.5	2 DEC. PLACES	±0.1
1 DEC. PLACE	±0.2	ANGULAR	±1°

△ DENOTES LATEST ISSUE CHANGES

⬭ DENOTES CRITICAL VALUE

PANORAMA ANTENNAS

THIS DOCUMENT MUST NOT BE COPIED OR DISCLOSED TO A THIRD PARTY WITHOUT THE WRITTEN CONSENT OF PANORAMA ANTENNAS LTD.

© 2018

A4