MQ-SMAFR-VAR

¼ Wave Portable Antenna

28/07/2015 v1



Rugged design for portable radios

Pre-tuned to frequency

Colour coded

Panorama offers a comprehensive range of portable antennas. The MQ-SMAFR is overmoulded in TPU. This feature improves both the durability and life expectancy of the antenna.

Each pre-tuned frequency band has its own colour code making it easy to identify the correct product.

Typical VSWR (410MHz)

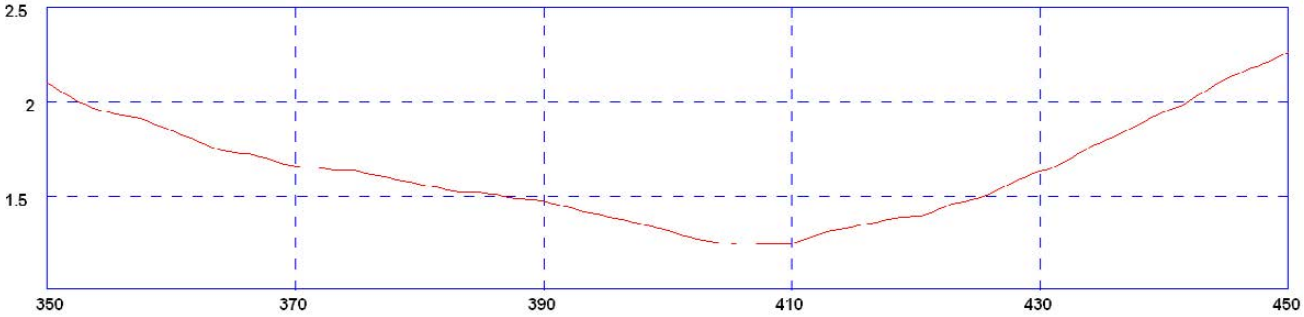

Typical VSWR (460MHz)

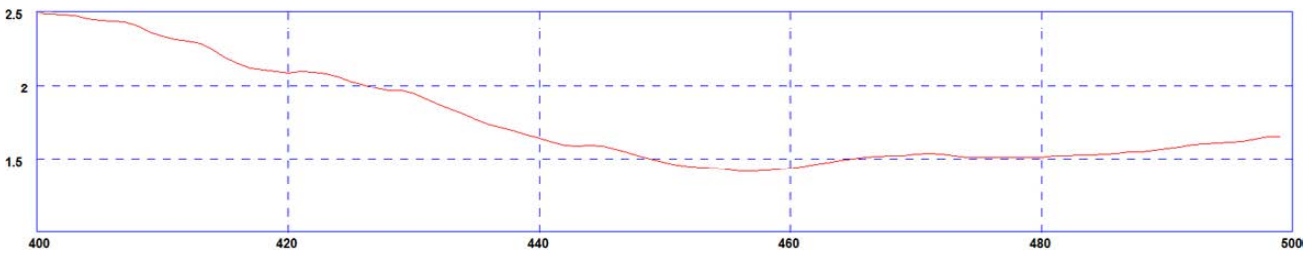

Technical Drawing

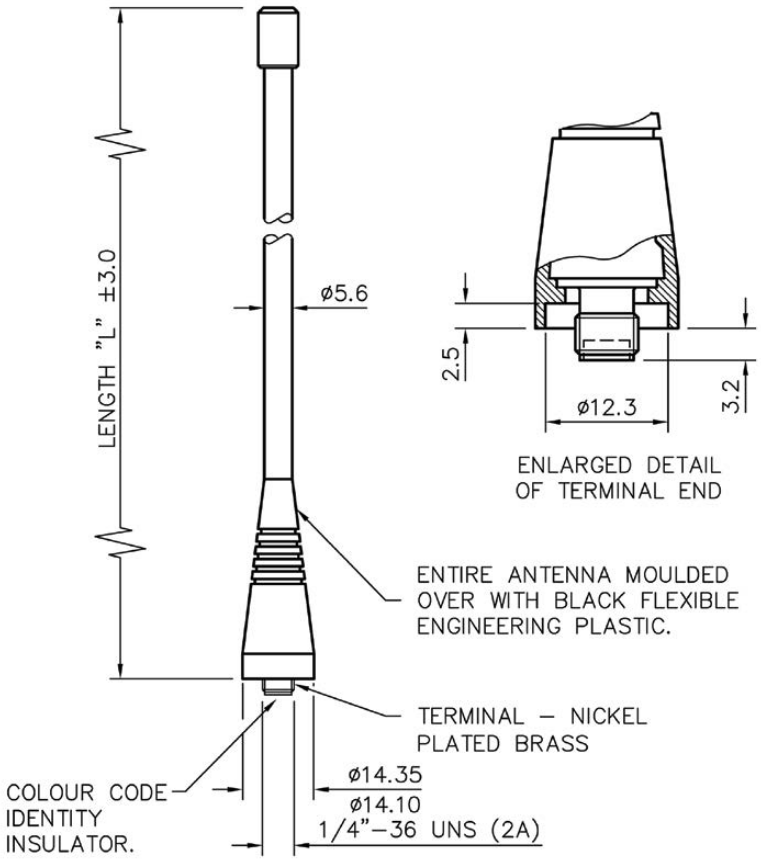

Part No.		MQ-SMAFR-TET	MQ-SMAFR-UT	MQ-SMAFR-U2	MQ-SMAFR-S5
Electrical Data					
Frequency Range (MHz)		380-430	406-472	450-520	806-872
Operational Band		TET	UT	U2	S5
VSWR (Typical)		< 2.0 : 1	< 2.0 : 1	< 2.0 : 1	< 2.0 : 1
Gain: Isotropic (Typical)		2dBi	2dBi	2dBi	2dBi
Compared to ¼ wave (Typical)		0dB	0dB	0dB	0dB
Impedance		50Ω	50Ω	50Ω	50Ω
Max Input Power (W)		25	25	25	25
Mechanical Data					
Dimensions (mm)	Length	181 (6.7")	174(6.8")	156 (6.1")	88 (3.5")
	Diameter	12.4 (0.5")	12.4 (0.5")	12.4 (0.5")	12.4 (0.5")
Operating Temp (°C)		-40° / +80°C (-40° / +176°F)	-40° / +80°C (-40° / +176°F)	-40° / +80°C (-40° / +176°F)	-40° / +80°C (-40° / +176°F)
Material		TPU	TPU	TPU	TPU
Colour Coding		Black	Black	Black	Black
Connector					
Type		SMA female	SMA female	SMA female	SMA female

PANORAMA ANTENNAS

Panorama Antennas Ltd
Frogmore, London, SW18 1HF, United Kingdom

T: +44 (0)20 8877 4444
F: +44 (0)20 8877 4477
E: sales@panorama-antennas.com
www.panorama-antennas.com

Waiver: The data given above is indicative of the performance of the product/s under particular conditions and does not imply a guarantee of performance. These specifications are subject to change without notice.
Copyright © Panorama Antennas Ltd. All rights reserved.