DRG. No. MQ–SMAFR–VAR

THIS DOCUMENT MUST NOT BE COPIED OR DISCLOSED TO A THIRD PARTY WITHOUT THE WRITTEN CONSENT OF PANORAMA ANTENNAS LTD.

© 2000 A4

DO NOT SCALE | PROJECTION

PART No.	FREQ. RANGE	LENGTH "L" mm	COLOUR CODE
MQ–SMAFR–U	430–472MHz	167	GREEN
MQ–SMAFR–S2	410–430MHz	177	WHITE
MQ–SMAFR–W	470–512MHz	154	WHITE
MQ–SMAFR–S1	380–400MHz	186	BLACK
MQ–SMAFR–TET	380–430MHz	181	ORANGE
MQ–SMAFR–UT	406–472MHz	174	BLUE
MQ–SMAFR–T	390–432MHz	179	RED
MQ–SMAFR–S5	806–872MHz	88	ORANGE
MQ–SMAFR–U2	450–512MHz.	156	BLACK
MQ–SMAFR–815	760–870MHz.	92	BLACK
9 MQ–SMAFR–T2	420–456MHz.	175	BLACK
9 MQ–SMAFR–470	450–490MHz.	160	YELLOW

THIS IS A PROPRIETARY ITEM OF PANORAMA ANTENNAS LTD. AND COULD BE SUBJECT TO CHANGE WITHOUT PRIOR NOTICE. THIS ITEM IS RoHS COMPLIANT.

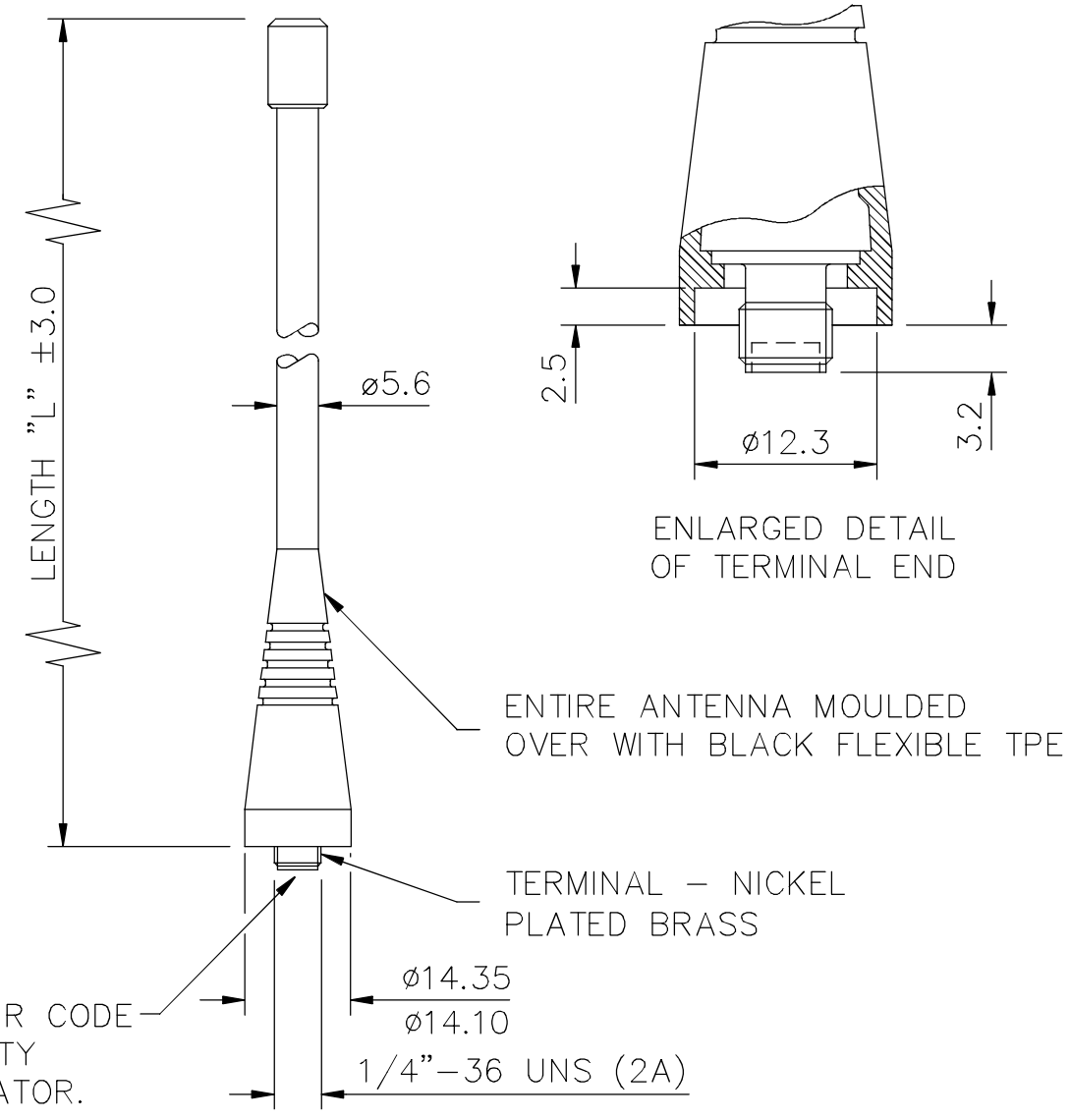

△ — DENOTES LATEST ISSUE CHANGES

C/NOTE	ISSUE	DATE	APPROVAL
00565	4	1.3.06	K.D.
01019	5	02.02.07	K.D.
01019	6	10.03.08	K.D.
01019	7	05.05.11	K.D.
01019	8	28.08.12	J.J.
01019	9	14.01.14	K.D.

TOLERANCES UNLESS OTHERWISE STATED
0 DEC. PLACE ±0.5 2 DEC. PLACES ±0.1
1 DEC. PLACE ±0.2 ANGULAR ±1°

DRAWN P.E. | DO.CHECK A.T.B.
SCALE 1:1 | DIMENSIONS IN mm
FILE MQ–SMAFR–VAR

TITLE MQ MOULDED UHF ANTENNA SMA FEMALE RECESSED – VARIOUS

MATERIAL | FINISH

PANORAMA ANTENNAS