THIS IS A PROPRIETARY ITEM OF PANORAMA ANTENNAS LTD. AND COULD BE SUBJECT TO CHANGE WITHOUT PRIOR NOTICE. THIS ITEM IS RoHS COMPLIANT.

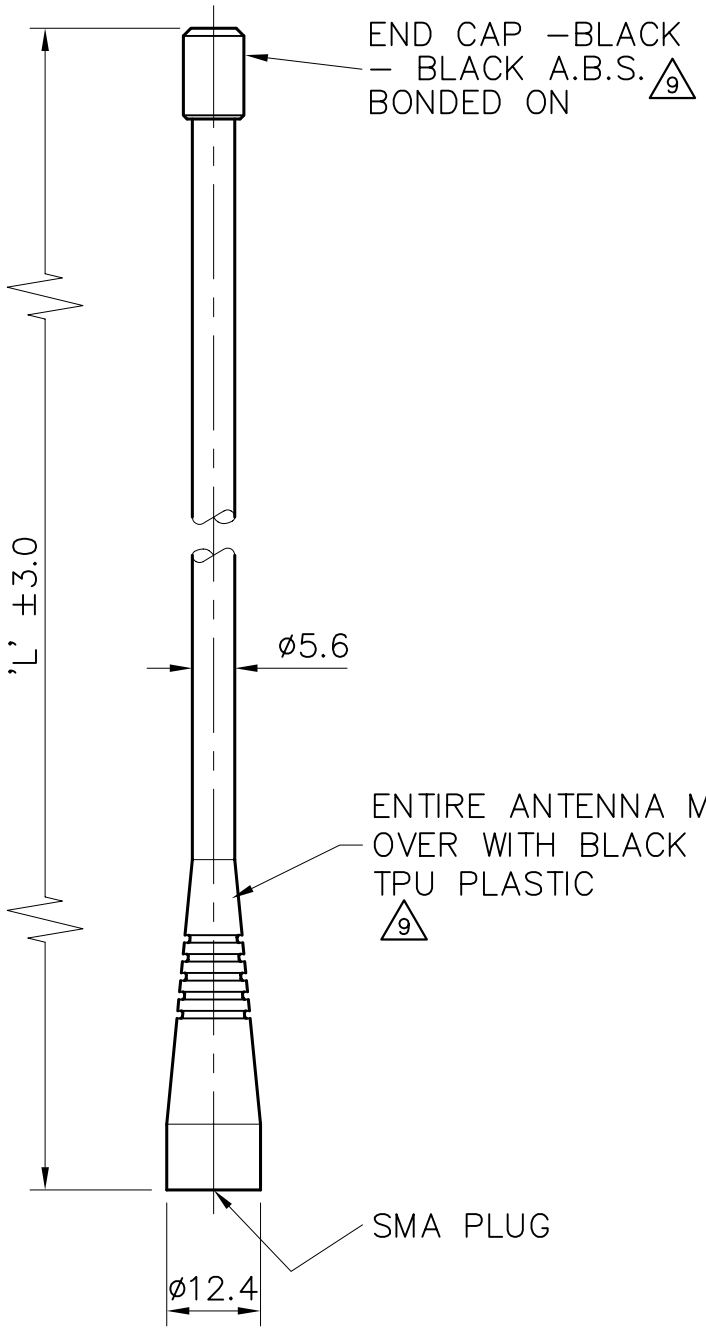

PART No.	FREQUENCY RANGE IN MHz.	'L' LENGTH IN mm
MQ–SMAMO–S	350–392	185
MQ–SMAMO–T	390–432	172
MQ–SMAMO–U	430–472	158
MQ–SMAMO–W	470–512	145
MQ–SMAMO–UT	406–472	162
MQ–SMAMO–S1	380–400	177
MQ–SMAMO–433	433	165
MQ–SMAMO–S2	410–430	169
MQ–SMAMO–S4	450–470	155
9 MQ–SMAMO–TET	380–430	173

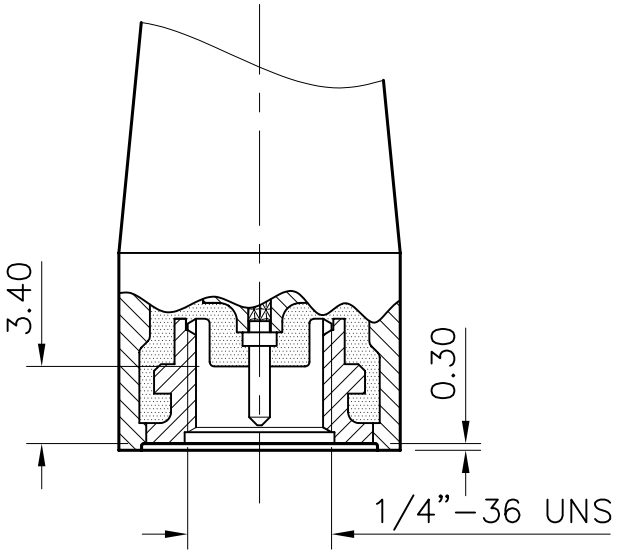

ENLARGED DETAIL OF TERMINAL END

DRG. No. MQ–SMAMO–VAR

TITLE
MQ MOULDED UHF FLEXIBLE ANTENNA SMA PLUG – VARIOUS

MATERIAL

FINISH

DRAWN	A.G.	DO.CHECK	K.D.
SCALE	1:1	DIMENSIONS IN mm	

FILE MQ–SMAMO–VAR

TOLERANCES UNLESS OTHERWISE STATED
0 DEC. PLACE ±0.5 2 DEC. PLACES ±0.1
1 DEC. PLACE ±0.2 ANGULAR ±1°

DO NOT SCALE | PROJECTION

C/NOTE	ISSUE	DATE	APPROVAL
00565	3	29.8.01	K.D.
00565	4	16.10.03	K.D.
01019	5	15.01.07	K.D.
01019	6	02.02.07	K.D.
01019	7	12.05.08	K.D.
01019	8	16.06.08	K.D.
01019	9	16.05.13	K.D.

△ — DENOTES LATEST ISSUE CHANGES

PANORAMA ANTENNAS

THIS DOCUMENT MUST NOT BE COPIED OR DISCLOSED TO A THIRD PARTY WITHOUT THE WRITTEN CONSENT OF PANORAMA ANTENNAS LTD.

© 2000 A4