THIS IS A PROPRIETARY ITEM OF PANORAMA ANTENNAS LTD. AND COULD BE SUBJECT TO CHANGE WITHOUT PRIOR NOTICE. THIS ITEM IS RoHS COMPLIANT.

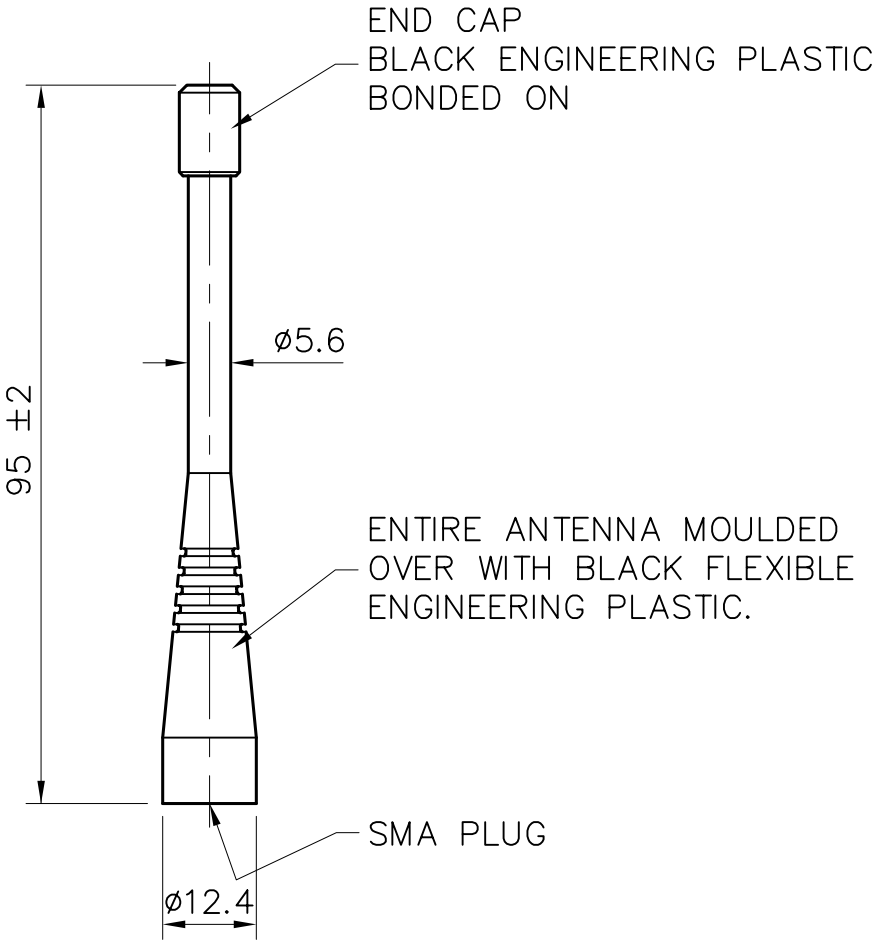

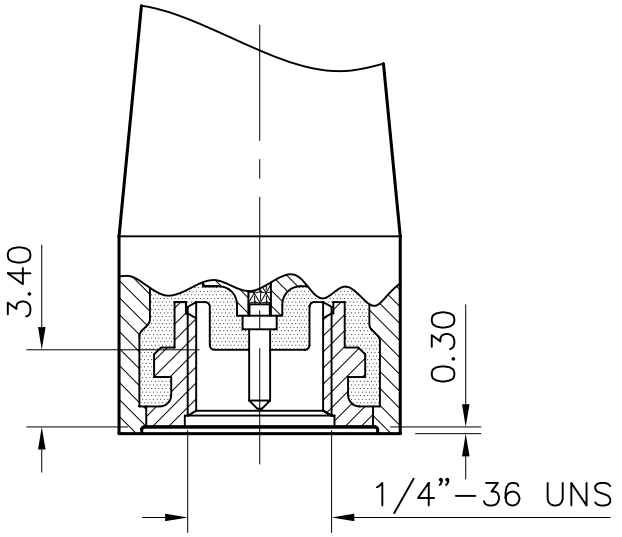

ENLARGED DETAIL
OF TERMINAL END

DRG. No.	MQ–SMAMO–S5
TITLE	MQ MOULDED UHF FLEX. ANTENNA, SMA PLUG 806–872MHz.
MATERIAL	
FINISH	
DRAWN A.G.	DO.CHECK K.D.
SCALE 1:1	DIMENSIONS IN mm

TOLERANCES UNLESS OTHERWISE STATED

0 DEC. PLACE	±0.5	2 DEC. PLACES	±0.1
1 DEC. PLACE	±0.2	ANGULAR	±1°

DO NOT SCALE | PROJECTION

C/NOTE	ISSUE	DATE	APPROVAL
01019	1	15.06.11	K.D.

△ — DENOTES LATEST ISSUE CHANGES

PANORAMA ANTENNAS

THIS DOCUMENT MUST NOT BE COPIED OR DISCLOSED TO A THIRD PARTY WITHOUT THE WRITTEN CONSENT OF PANORAMA ANTENNAS LTD.

© 2011

A4