PART NUMBER	FREQUENCY RANGE (MHz)	LENGTH, 'L' (mm)	COLOUR CODE RING	WEIGHT (g)
MQ-TNC-418	418	176	BLACK	28
MQ-TNC-433	433	175	BLACK	28
MQ-TNC-434	434	175	ORANGE	28
MQ-TNC-434-GREY	434	175	ORANGE	28
MQ-TNC-600	600	119	BLACK	18
MQ-TNC-760	760	92	BLACK	15
MQ-TNC-800	800	93	BLACK	15
MQ-TNC-855	855	87	BLACK	14
MQ-TNC-860	860	86	BLACK	14
MQ-TNC-868	868	85	BLACK	14
MQ-TNC-915	915	85	BLACK	14
MQ-TNC-S	350 - 392	191	YELLOW	29
MQ-TNC-S4	450 - 470	161	YELLOW	27
MQ-TNC-T	390 - 432	178	RED	28
MQ-TNC-T2	420 - 456	174	ORANGE	28
MQ-TNC-TET	380 - 430	181	ORANGE	28
MQ-TNC-U	430 - 472	164	GREEN	27
MQ-TNC-UT	406 - 472	173	BLUE	28
MQ-TNC-W	470 - 512	145	WHITE	26

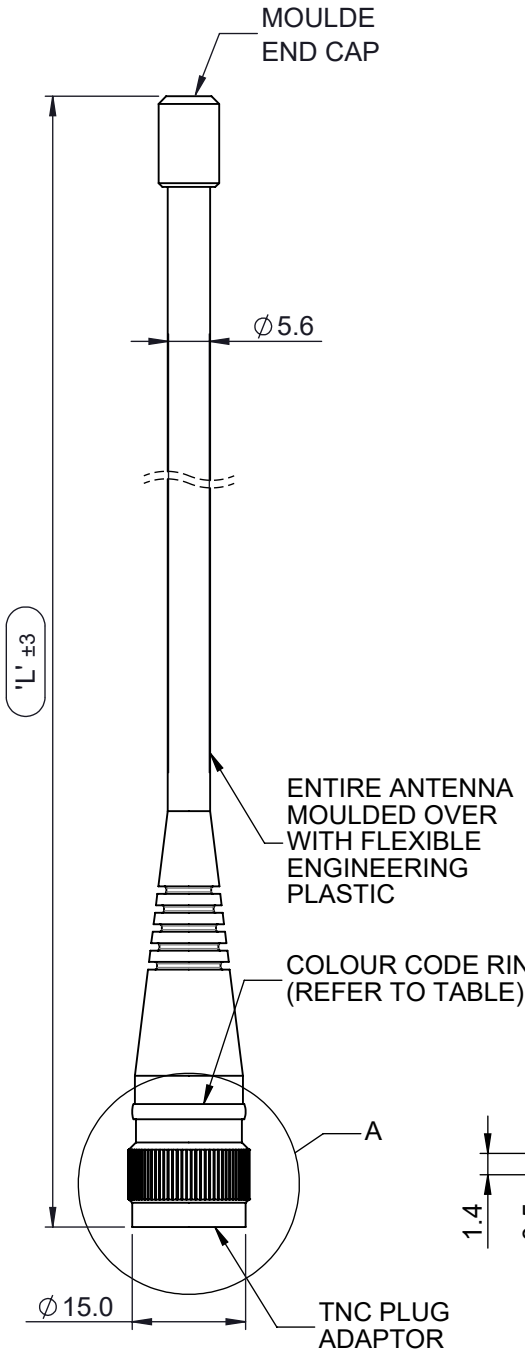

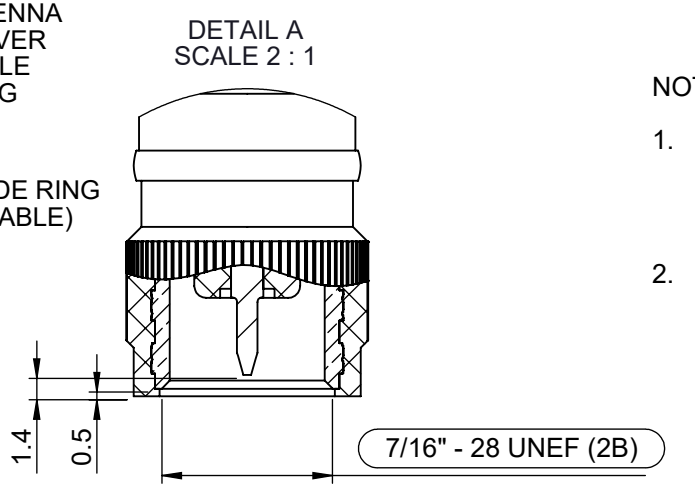

NOTES:

1. SAMPLES MUST BE APPROVED BY PANORAMA ANTENNAS Q.C. BEFORE COMMENCING PRODUCTION.

2. ALL MATERIALS SUPPLIED MUST BE RoHS3 (DIRECTIVE (EU) 2015/863) COMPLIANT AND MUST NOT CONTAIN ANY SUBSTANCES OF VERY HIGH CONCERN (SVHCs) LISTED UNDER REACH OR POLY-AROMATIC HYDROCARBONS (PAHs), OR PERSISTENT ORGANIC POLLUTANTS (POPs) CONTROLLED BY THE STOCKHOLM CONVENTION.

DRG. No. MQ-TNC-VAR | SHEET 1 OF 2

PRODUCT/ASSEMBLY: 1014 - PORTABLE ANTENNAS

DESCRIPTION: UHF PORT ANT 1/4W TNC PLUG - VARIOUS

MATERIAL: N/A

FINISH: N/A

WEIGHT: SEE TABLE

APPROVED: KD | DO.CHECK: CL

SCALE: 1:1 | DIMENSIONS IN mm

DO NOT SCALE | 3RD ANGLE PROJECTION

PCN	REV.	DESCRIPTION	DATE	DRN
01019	9	PRODUCTION ISSUE	21/09/2020	SL

TOLERANCES UNLESS OTHERWISE STATED

0 DEC. PLACE	±0.5	2 DEC. PLACES	±0.1
1 DEC. PLACE	±0.2	ANGULAR	±1°

△ DENOTES LATEST ISSUE CHANGES | ⬭ DENOTES CRITICAL VALUE

PANORAMA ANTENNAS

THIS DOCUMENT MUST NOT BE COPIED OR DISCLOSED TO A THIRD PARTY WITHOUT THE WRITTEN CONSENT OF PANORAMA ANTENNAS LTD.

© 2020

A4