DRG. No.	MUG-NMO-VAR

© 2016 A4 THIS DOCUMENT MUST NOT BE COPIED OR DISCLOSED TO A THIRD PARTY WITHOUT THE WRITTEN CONSENT OF PANORAMA ANTENNAS LTD.

DO NOT SCALE | △ DENOTES LATEST ISSUE CHANGES | DENOTES CRITICAL VALUE | PROJECTION

TOLERANCES UNLESS OTHERWISE STATED

0 DEC. PLACE	±0.5	2 DEC. PLACES	±0.1
1 DEC. PLACE	±0.2	ANGULAR	±1°

PART No.	FREQ (MHz)	LENGTH 'L' (mm)
MUG-NMO-TET	380-430	385
MUG-NMO-S4	450-470	244

△2

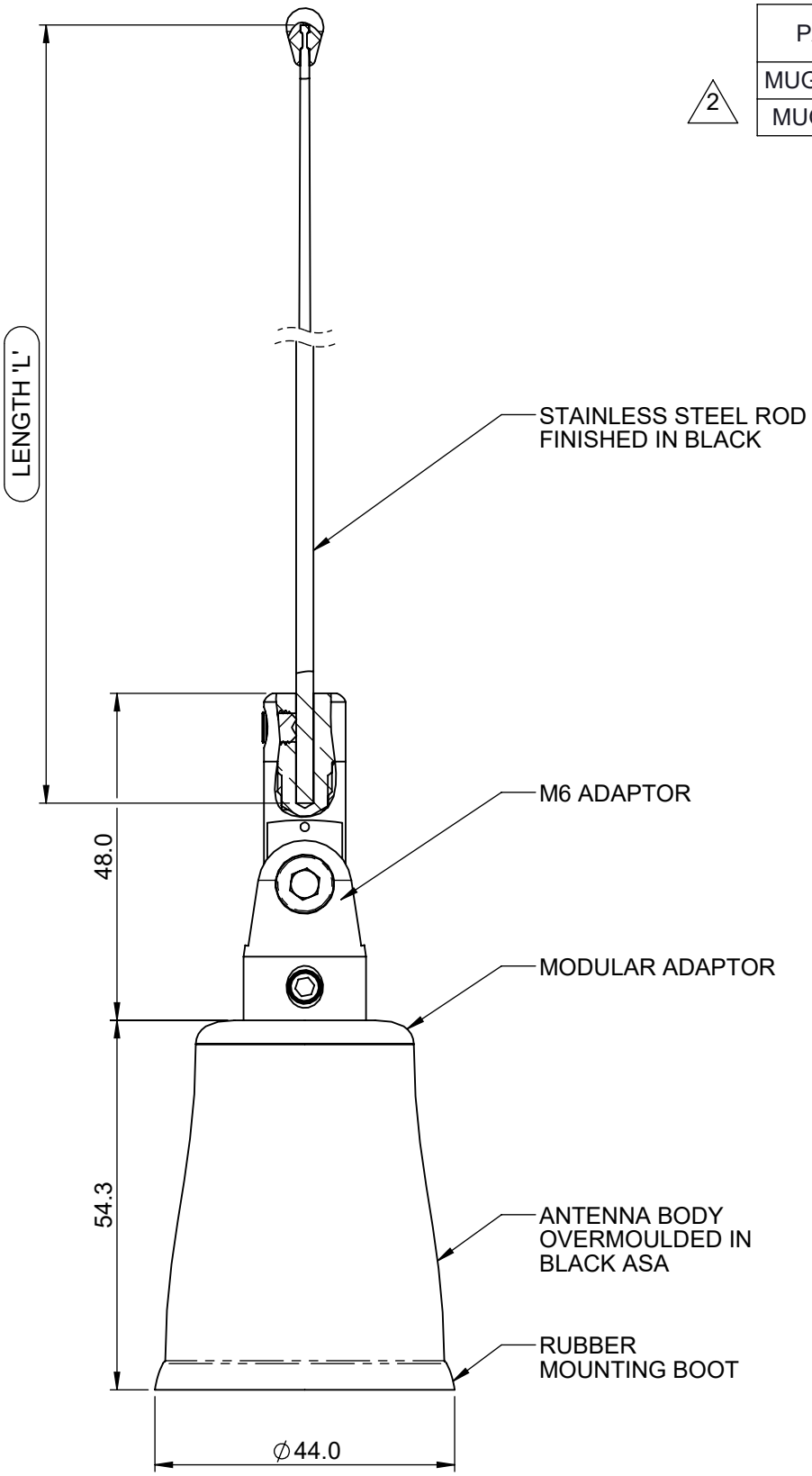

NOTES:

1. SAMPLES MUST BE APPROVED BY PANORAMA ANTENNAS Q.C. BEFORE COMMENCING PRODUCTION.
2. ALL MATERIALS SUPPLIED MUST BE RoHS2 (DIRECTIVE 2011/65/EU) COMPLIANT AND MUST NOT CONTAIN ANY SUBSTANCES OF VERY HIGH CONCERN (SVHCs) LISTED UNDER REACH OR POLY-AROMATIC HYDROCARBONS (PAHs), OR PERSISTENT ORGANIC POLLUTANTS (POPs) CONTROLLED BY THE STOCKHOLM CONVENTION.

PCN	REV.	DESCRIPTION	DATE	DRN.
01019	1	INITIAL ISSUE	22/04/2016	AR
01019	2	TABLE VARIANTS ADDED.	28/07/2016	AR

PRODUCT/ASSEMBLY: PORTABLE ANTENNAS

MATERIAL: N/A

FINISH: N/A

WEIGHT 206.88g | SHEET 1 OF 1

DESCRIPTION: UHF 1/2 WAVE ANTENNA NMO

APPROVED	D.O.CHECK	SCALE	DIMENSIONS IN mm
KD	IC	1:1	

PANORAMA ANTENNAS