1	2	3	4	5	6

3RD ANGLE PROJECTION | DO NOT SCALE | DENOTES LATEST ISSUE CHANGES | DENOTES CRITICAL VALUE

© 2018 A4 THIS DOCUMENT MUST NOT BE COPIED OR DISCLOSED TO A THIRD PARTY WITHOUT THE WRITTEN CONSENT OF PANORAMA ANTENNAS LTD.

DRG. No. SC1-SMA-PC178

TOLERANCES UNLESS OTHERWISE STATED			
0 DEC. PLACE	±0.5	2 DEC. PLACES	±0.1
1 DEC. PLACE	±0.2	ANGULAR	±1°

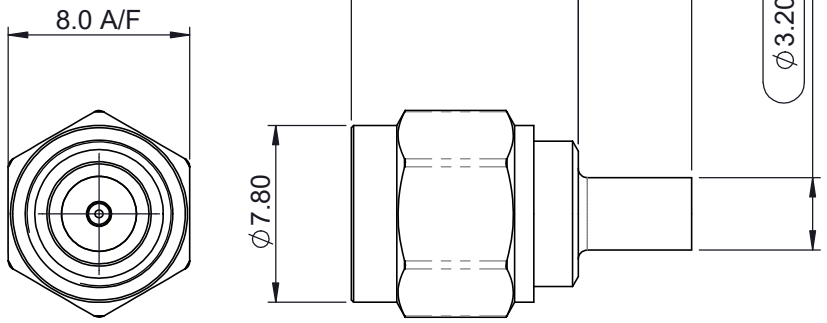

SMA PLUG BODY NICKEL PLATED BRASS
WITH PTFE INSULATOR

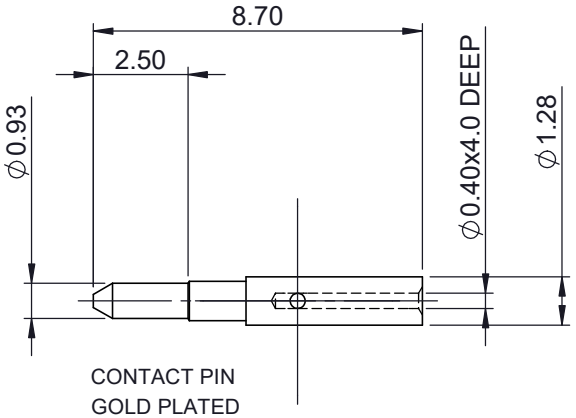

CONTACT PIN
GOLD PLATED

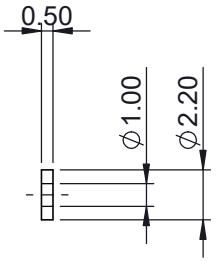

REAR INSULATOR

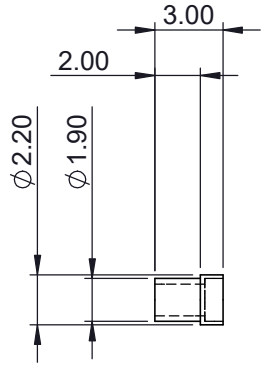

CRIMP INSERT BUSH
NICKEL PLATED

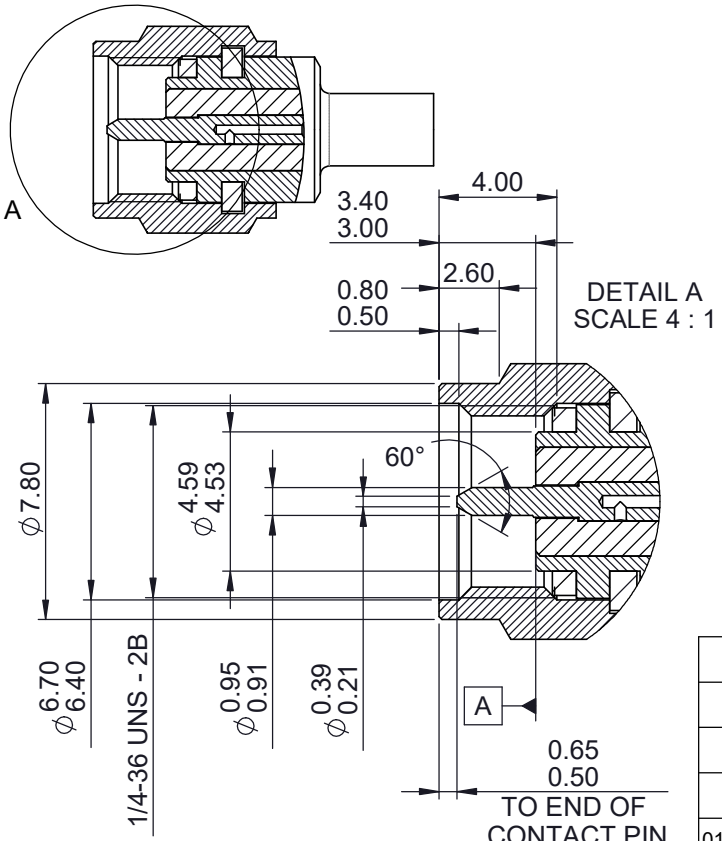

NOTES:

1. CONTACT PIN MUST REMAIN CAPTIVE AFTER ASSEMBLY OF CONNECTOR.
2. FINAL CONNECTOR ASSEMBLY MUST CONFORM TO STANDARD INTERFACE DIMENSIONS SHOWN.
3. MATERIALS:
   CONNECTOR BODY: BRASS CW603N (CuZn36Pb3), BRASS CW614N (CuZn39Pb3) OR APPROVED EQUIVALENT
   CONTACT PIN: HARD BRASS CW614N (CuZn39Pb3) OR APPROVED EQUIVALENT [MALE]
   INSULATOR: PTFE (ASTM D4894 / BS EN ISO 12086)
4. FINISH:
   CONNECTOR BODY:
   NICKEL (1.27µm MIN.) OVER COPPER (1.27µm MIN.) - FINISHED PLATING THICKNESS 2.5-3.0µm.

   CONTACT PIN:
   GOLD PLATED (1.27µm MIN.) OVER NICKEL (1.27µm MIN.)

   INSULATOR: SMOOTH MACHINED
   CRIMP TUBE: NICKEL OVER COPPER PLATE 2.5µm MIN. OR AS PER CONNECTOR BODY.
5. ALL THREADS TO BE FREE FROM RESTRICTION ALONG ENTIRE LENGTH AFTER PLATING.
6. ALL DIMENSIONS APPLY AFTER PLATING.
7. SAMPLES MUST BE APPROVED BY PANORAMA ANTENNAS Q.C. BEFORE COMMENCING PRODUCTION.
8. ALL MATERIALS SUPPLIED MUST BE RoHS3 (DIRECTIVE (EU) 2015/863) COMPLIANT AND MUST NOT CONTAIN ANY SUBSTANCES OF VERY HIGH CONCERN (SVHCs) LISTED UNDER REACH OR POLY-AROMATIC HYDROCARBONS (PAHs), OR PERSISTENT ORGANIC POLLUTANTS (POPs) CONTROLLED BY THE STOCKHOLM CONVENTION.
9. IN ORDER TO ASSURE COMPLIANCE WITH THE USA DODD-FRANK ACT (SECTION 1502) TIN, GOLD, TANTALUM AND TUNGSTEN CONTAINED IN PANORAMA PRODUCTS MUST BE FULLY TRACEABLE TO A SMELTER APPROVED BY THE CONFLICT-FREE SOURCING INITIATIVE (www.comflictfreesmelter.org

PCN	REV.	DESCRIPTION	DATE	DRN.
01019	3	REDRAWN IN SOLIDWORKS	05/12/2018	CL

PRODUCT/ASSEMBLY: 2008 - CONNECTORS
MATERIAL: SEE NOTES
FINISH: SEE NOTES
WEIGHT 0.40g
SHEET 1 OF 1

DESCRIPTION: SMA PLUG CRIMP FOR RG-178

APPROVED	D.O.CHECK	SCALE	DIMENSIONS IN mm
KD	NA	3:1	

PANORAMA ANTENNAS