DRG. No.	ASF-144-785	© 2020 A4 THIS DOCUMENT MUST NOT BE COPIED OR DISCLOSED TO A THIRD PARTY WITHOUT THE WRITTEN CONSENT OF PANORAMA ANTENNAS LTD.	DO NOT SCALE	DENOTES LATEST ISSUE CHANGES	DENOTES CRITICAL VALUE	PROJECTION

TOLERANCES UNLESS OTHERWISE STATED			
0 DEC. PLACE	±0.5	2 DEC. PLACES	±0.1
1 DEC. PLACE	±0.2	ANGULAR	±1°

FREQUENCY RANGES:

138 - 150 MHz
764 - 806 MHz

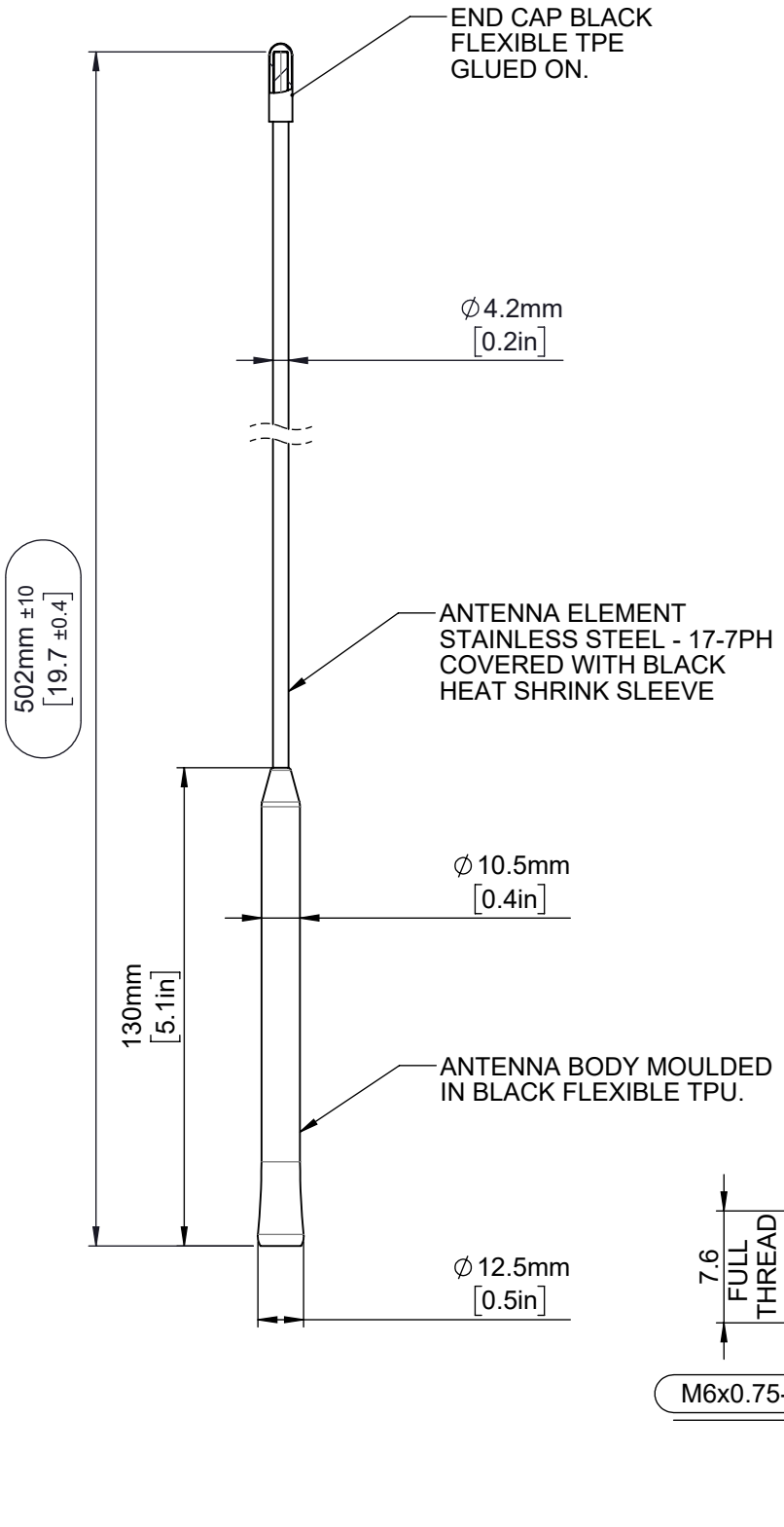

NOTES:

1. MOULDED COMPONENT (ANTENNA BODY) TO BE FREE FROM DISTORTION, FLASH, SINK AND FLOW MARKS. COSMETIC SURFACES MUST BE FREE FROM BLEMISHES AND ALL OTHER SURFACE IMPERFECTIONS. FINISH: FINE SPARK TO 24 VDI (Ra 1.6µm).
2. SAMPLES MUST BE APPROVED BY PANORAMA ANTENNAS Q.C. BEFORE COMMENCING PRODUCTION.
3. ALL MATERIALS SUPPLIED MUST BE RoHS3 (DIRECTIVE (EU) 2015/863) COMPLIANT AND MUST NOT CONTAIN ANY SUBSTANCES OF VERY HIGH CONCERN (SVHCs) LISTED UNDER REACH OR POLY-AROMATIC HYDROCARBONS (PAHs), OR PERSISTENT ORGANIC POLLUTANTS (POPs) CONTROLLED BY THE STOCKHOLM CONVENTION.

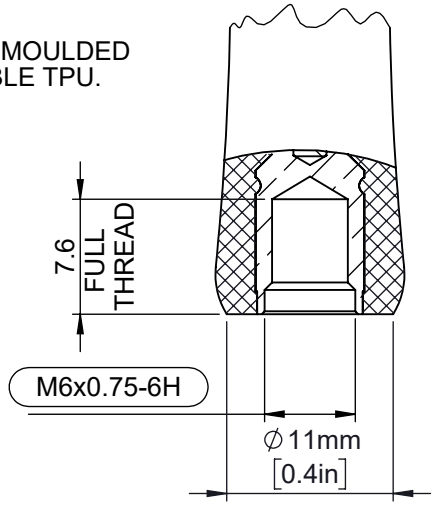

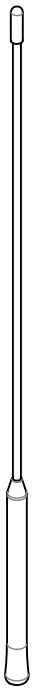

ISO VIEW
SCALE 1:4

PCN	REV.	DESCRIPTION	DATE	DRN.
01019	A	INITIAL ISSUE	11/03/2020	CL

PRODUCT/ASSEMBLY: 1020 - WHIPS
MATERIAL: N/A
FINISH: N/A
WEIGHT 37.80(NET)g
SHEET 1 OF 2

DESCRIPTION: FLEXI 144MHz/785MHz ANT ELEMENT

APPROVED	D.O.CHECK	SCALE	DIMENSIONS IN mm
KD	AA	1:2	

PANORAMA ANTENNAS