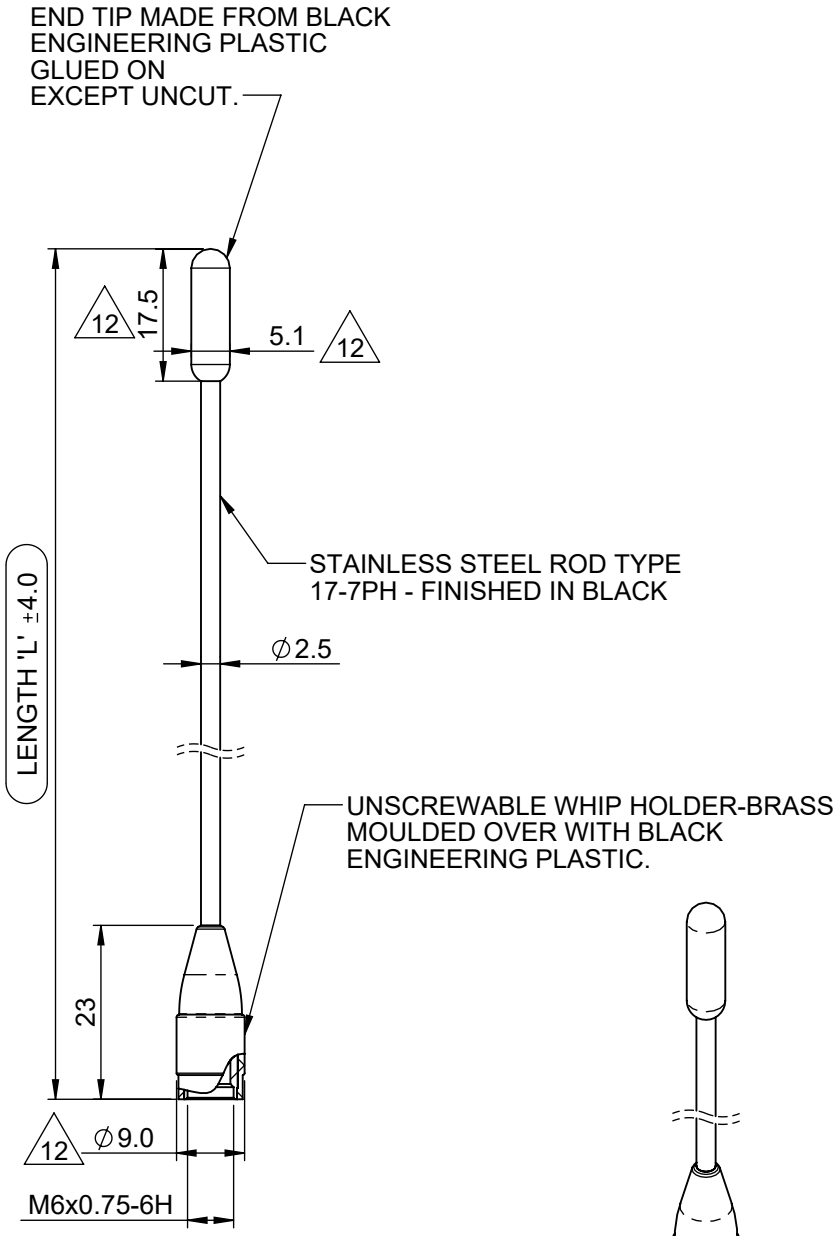

ISO VIEW
SCALE 1:1

PART No.	FREQUENCY RANGE IN MHz	LENGTH 'L' IN mm
AS	UNCUT	600
AS-H4	141-151	480
AS-H5	149-159	456
AS-H6	156-162	441
AS-H7	162-174	417
AS-JRC	139-157	472
AS-K5	174-192	383
AS-K6	192-208	352
AS-K7	208-225	325
AS-L	220-250	298
AS-M	245-275	269
AS-N	270-300	245
AS-P	300-336	200
AS-R	330-366	183
AS-S	350-392	174
AS-S1	380-400	165
AS-S2	410-430	160
AS-T	390-432	158
AS-U	430-472	140
AS-W	400-430	128
AS-UT	406-472	150
AS-T1	400-430	156
AS-T2	420-456	145
AS-TET	380-430	163
AS-R1	300-334	201
AS-R2	350-370	179
AS-S4	450-470	137
AS-161	161	437
AS-H4A	138-155	478
AS-H6A	155-174	426
AS-U1	410-470	149
AS-U2	450-512	131

NOTES:

1. SAMPLES MUST BE APPROVED BY PANORAMA ANTENNAS Q.C. BEFORE COMMENCING PRODUCTION.

2. ALL MATERIALS SUPPLIED MUST BE RoHS2 (DIRECTIVE 2011/65/EU) COMPLIANT AND MUST NOT CONTAIN ANY SUBSTANCES OF VERY HIGH CONCERN (SVHCs) LISTED UNDER REACH OR POLY-AROMATIC HYDROCARBONS (PAHs), OR PERSISTENT ORGANIC POLLUTANTS (POPs) CONTROLLED BY THE STOCKHOLM CONVENTION.

DRG. No. AS-VAR

SHEET 1 OF 1

PRODUCT/ASSEMBLY: 1020 - WHIPS

DESCRIPTION: ANTENNA ELEMENT 1/4W BLACK

MATERIAL: N/A

FINISH: N/A

WEIGHT: N/A

APPROVED: KD | DO.CHECK: IC

SCALE: 1:1 | DIMENSIONS IN mm

DO NOT SCALE | 3RD ANGLE PROJECTION

PCN	REV.	DESCRIPTION	DATE	DRN
01019	12	DRAWN IN 3D	17/04/2018	MM

TOLERANCES UNLESS OTHERWISE STATED

0 DEC. PLACE	±0.5	2 DEC. PLACES	±0.1
1 DEC. PLACE	±0.2	ANGULAR	±1°

△ DENOTES LATEST ISSUE CHANGES

⬭ DENOTES CRITICAL VALUE

PANORAMA ANTENNAS

THIS DOCUMENT MUST NOT BE COPIED OR DISCLOSED TO A THIRD PARTY WITHOUT THE WRITTEN CONSENT OF PANORAMA ANTENNAS LTD.

© 2018

A4