3RD ANGLE PROJECTION	DO NOT SCALE	DENOTES LATEST ISSUE CHANGES	DENOTES CRITICAL VALUE	© 2021 A3 THIS DOCUMENT MUST NOT BE COPIED OR DISCLOSED TO A THIRD PARTY WITHOUT THE WRITTEN CONSENT OF PANORAMA ANTENNAS LTD.	DWG. No.	BSM-6-60-VARSP

TOLERANCES UNLESS OTHERWISE STATED			
0 DEC. PLACE	±0.5	2 DEC. PLACES	±0.1
1 DEC. PLACE	±0.2	ANGULAR	±1°

OPERATING FREQUENCY:
600-6000 MHz

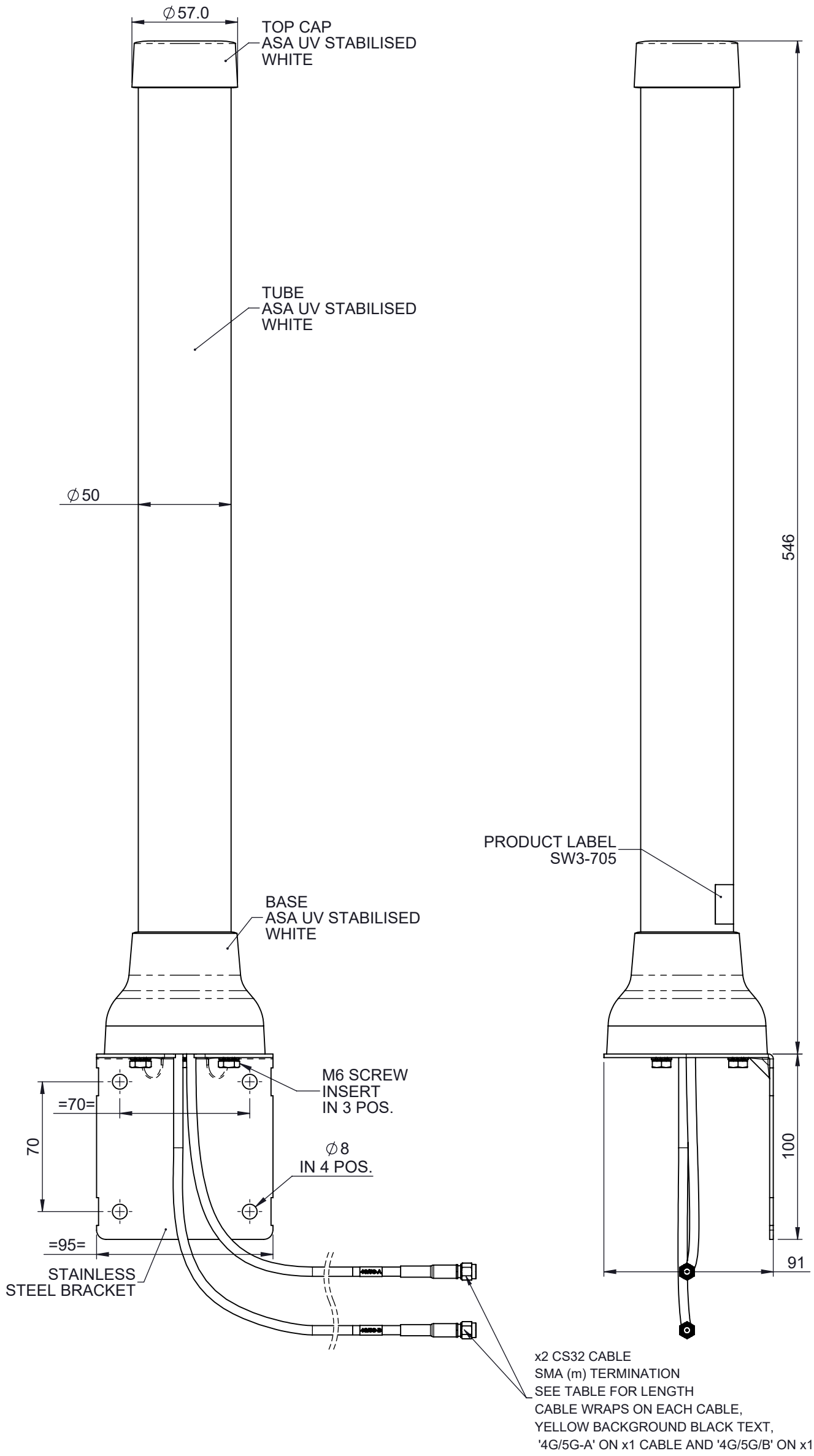

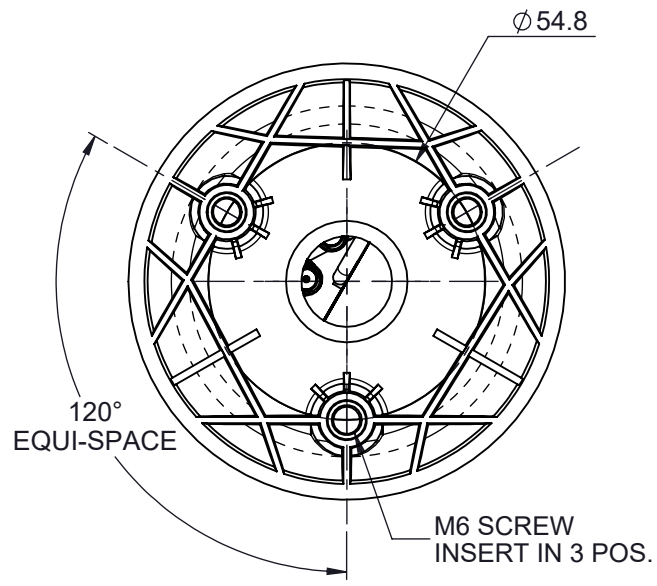

LOOSE COMPONENTS:

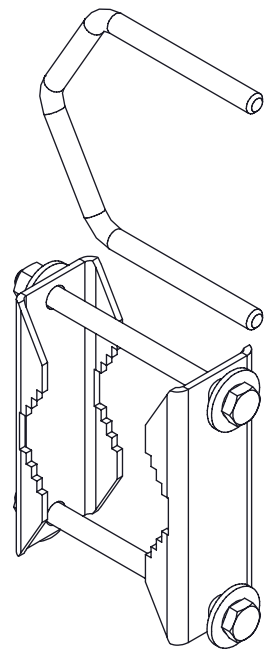

x2 SAB-233 STAINLESS STEEL MAST CLAMP BRACKET ASSEMBLY (SCALE 1:2)

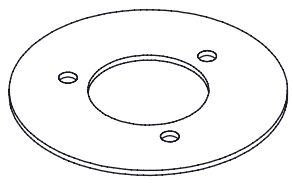

x1 SEALING GASKET (SCALE 1:2)

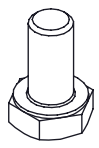

x3 M6x12 STAINLESS STEEL SCREWS (SCALE 1:1)

x3 M6 STAINLESS STEEL SHAKEPROOF WASHER (SCALE 1:1)

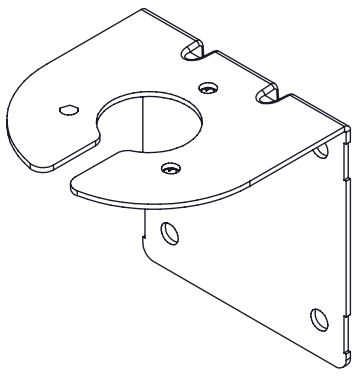

x1 STAINLESS STEEL POLE WALL RAIL BRACKET (SCALE 1:2.5)

NOTES:

1. SAMPLES MUST BE APPROVED BY PANORAMA ANTENNAS Q.C. BEFORE COMMENCING PRODUCTION.
2. ALL MATERIALS SUPPLIED MUST BE RoHS3 (DIRECTIVE (EU) 2015/863) COMPLIANT AND MUST NOT CONTAIN ANY SUBSTANCES OF VERY HIGH CONCERN (SVHCs) LISTED UNDER REACH OR POLY-AROMATIC HYDROCARBONS (PAHs), OR PERSISTENT ORGANIC POLLUTANTS (POPs) CONTROLLED BY THE STOCKHOLM CONVENTION.
3. BRACKET IS NOT ASSEMBLED TO ANTENNA. BRACKET IS SUPPLIED LOOSE.

2

PART NUMBER	CABLE LENGTH 'L'	WEIGHT (g)
BSM-6-60-5SP	5100 ±50	1400

PCN	REV.	DESCRIPTION	DATE	DRN.
01019	A	INITIAL ISSUE	31/03/2021	AR
01019	B	BOM UPDATE	17/05/2021	AR
01019	1	PRODUCTION ISSUE	16/08/2021	AR
01019	2	BOM AND CABLE UPDATE	25/04/2022	AR

PRODUCT/ASSEMBLY: 1002 - CONSUMER WIRELESS PRODUCTS
MATERIAL: N/A
FINISH: N/A
WEIGHT: SEE TABLE
SHEET 1 OF 2

DESCRIPTION: 4G/5G MIMO OMNI TUBE ANTENNA VARm SMA(m)

APPROVED	D.O. CHECK	SCALE	DIMENSIONS IN mm
JJ	SL	1:5	

PANORAMA ANTENNAS