DRG No. WM8-BADEP3G-26-NJ	© 2019 A4 THIS DOCUMENT MUST NOT BE COPIED OR DISCLOSED TO A THIRD PARTY WITHOUT THE WRITTEN CONSENT OF PANORAMA ANTENNAS LTD.	DO NOT SCALE	DENOTES LATEST ISSUE CHANGES	DENOTES CRITICAL VALUE	PROJECTION

TOLERANCES UNLESS OTHERWISE STATED			
0 DEC. PLACE	±0.5	2 DEC. PLACES	±0.1
1 DEC. PLACE	±0.2	ANGULAR	±1°

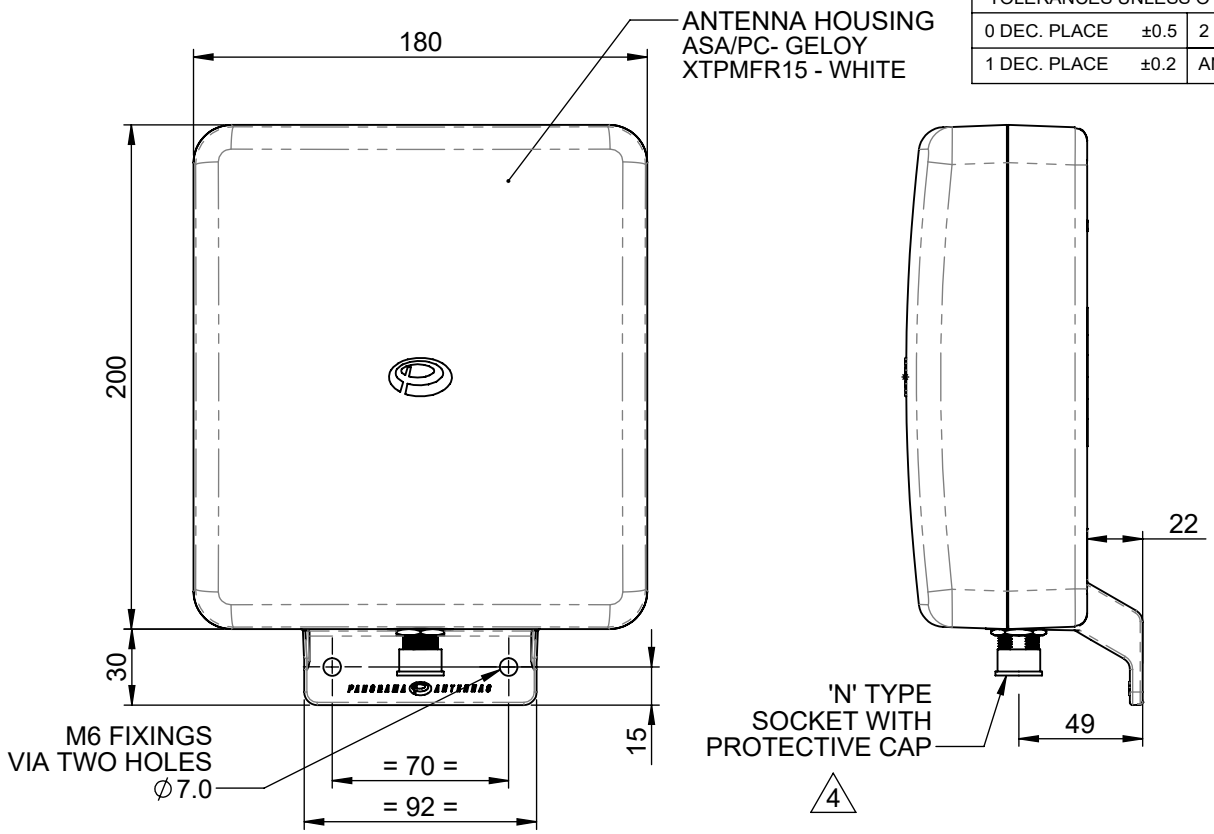

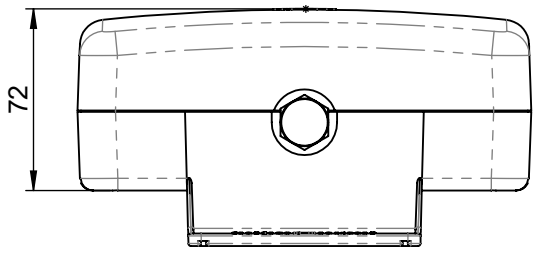

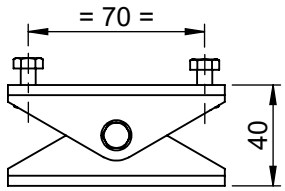

WALL MOUNT BRACKET
SUPPLIED LOOSE.

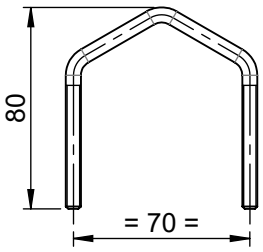

V-BOLT
1 x SUPPLIED

4

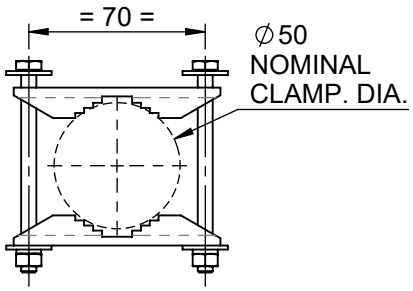

MAST MOUNT BRACKET
SUPPLIED LOOSE

ISO VIEW
SCALE 1:5

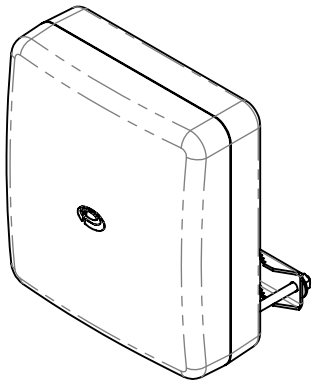

NOTES:

1. THIS IS A LOW PIM PRODUCT.
2. SAMPLES MUST BE APPROVED BY PANORAMA ANTENNAS Q.C. BEFORE COMMENCING PRODUCTION.
3. ALL MATERIALS SUPPLIED MUST BE RoHS3 (DIRECTIVE (EU) 2015/863) COMPLIANT AND MUST NOT CONTAIN ANY SUBSTANCES OF VERY HIGH CONCERN (SVHCs) LISTED UNDER REACH OR POLY-AROMATIC HYDROCARBONS (PAHs), OR PERSISTENT ORGANIC POLLUTANTS (POPs) CONTROLLED BY THE STOCKHOLM CONVENTION.

PCN	REV.	DESCRIPTION	DATE	DRN.
01019	4	PROTECTIVE CAP ADDED. BRACKETS UPDATED.	24/01/2019	PE

PRODUCT/ASSEMBLY: 1002-CONSUMER WIRELESS PRODUCTS
MATERIAL: SEE DRAWING
FINISH: SEE DRAWING
WEIGHT 1180.77g
SHEET 1 OF 2

DESCRIPTION: WALL MOUNT ANTENNA. N-SOCKET WITH MOUNTING BRACKETS.

APPROVED	D.O.CHECK	SCALE	DIMENSIONS IN mm
JJ	IC	1:3	

PANORAMA ANTENNAS