3RD ANGLE PROJECTION	DO NOT SCALE	△ DENOTES LATEST ISSUE CHANGES	DENOTES CRITICAL VALUE	© 2019 A3 THIS DOCUMENT MUST NOT BE COPIED OR DISCLOSED TO A THIRD PARTY WITHOUT THE WRITTEN CONSENT OF PANORAMA ANTENNAS LTD.	DWG. No. DMM-7-38-2SP

TOLERANCES UNLESS OTHERWISE STATED			
0 DEC. PLACE	±0.5	2 DEC. PLACES	±0.1
1 DEC. PLACE	±0.2	ANGULAR	±1°

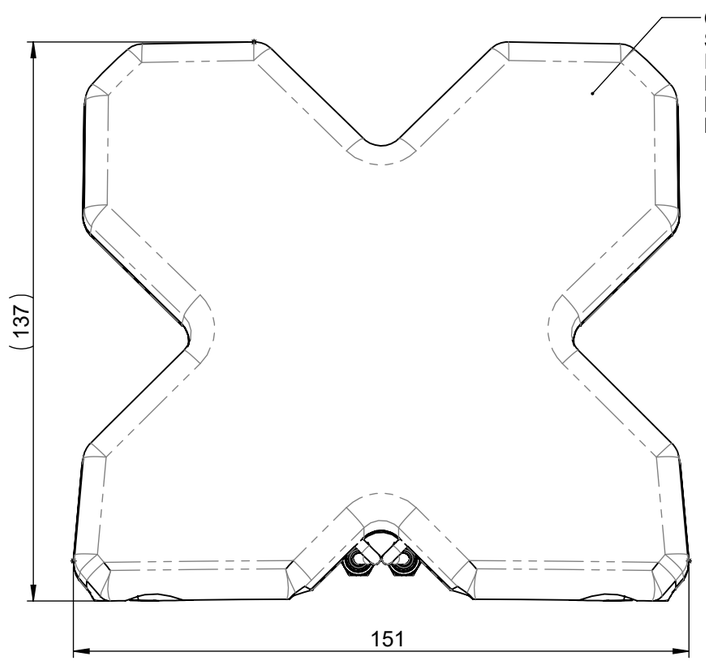

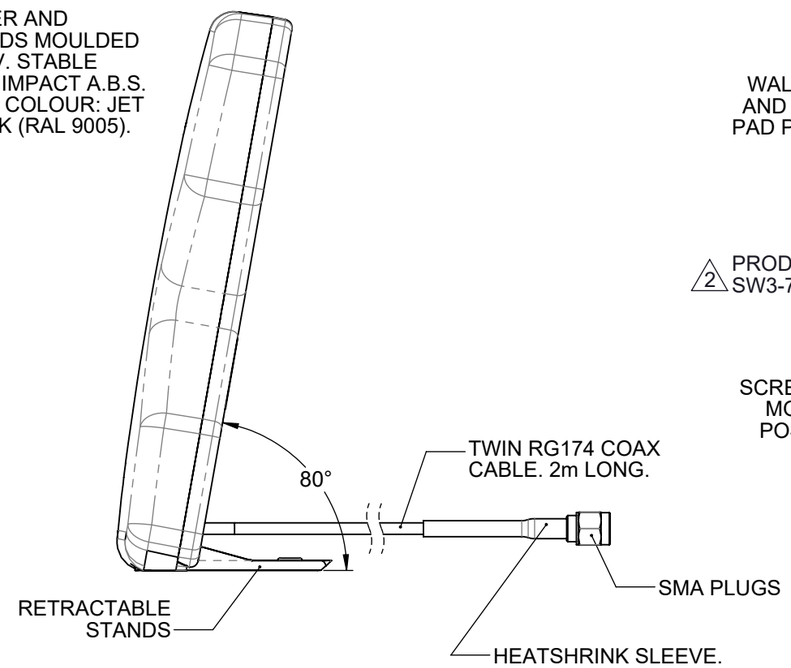

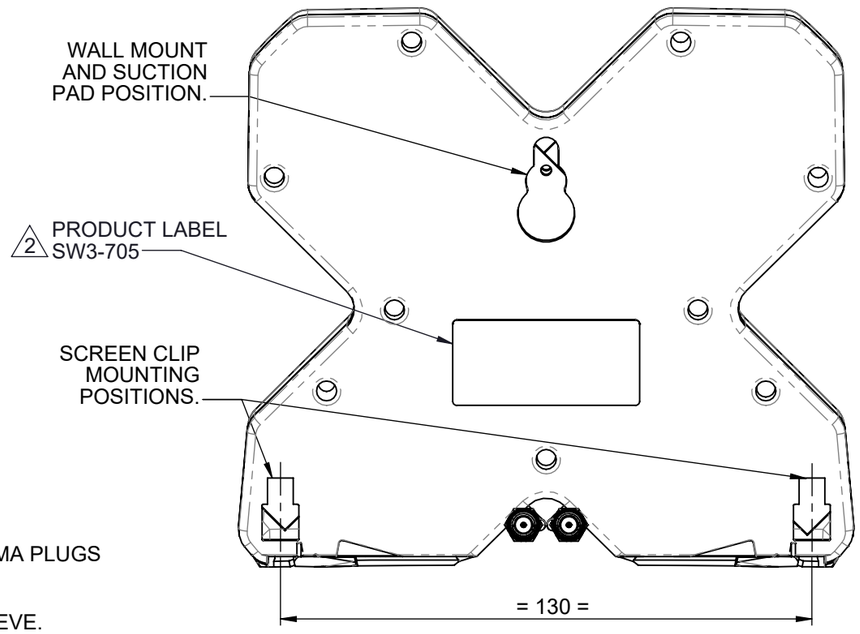

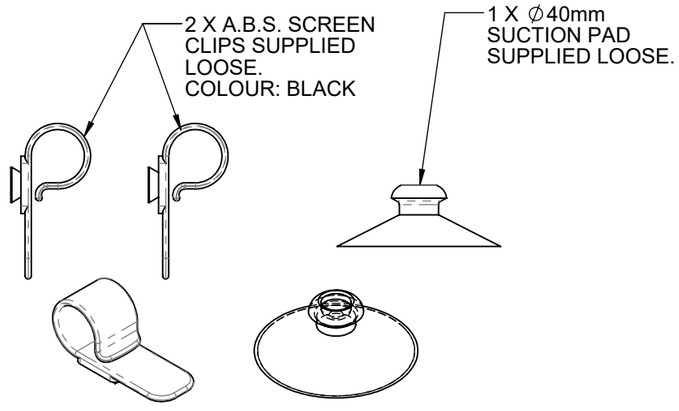

ISO VIEW
SCALE 1:1.5

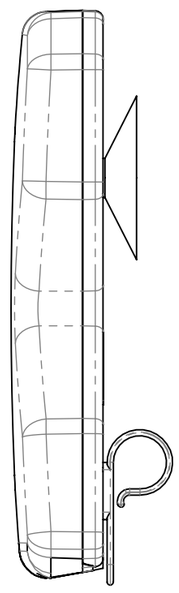

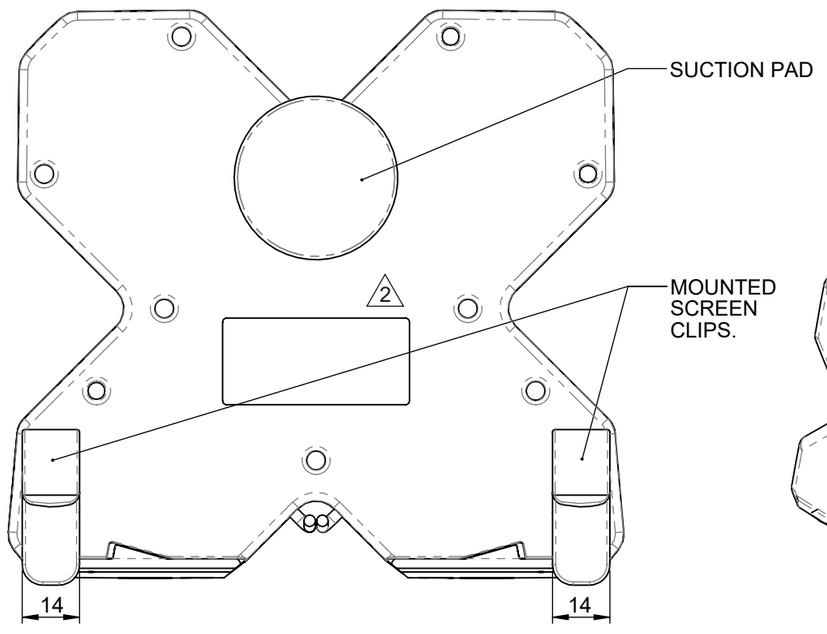

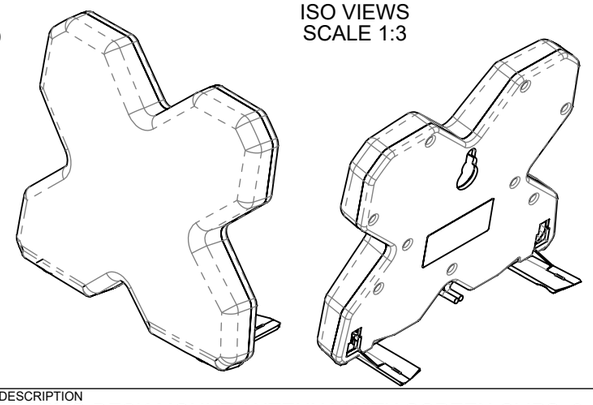

NOTES:

1. SAMPLES MUST BE APPROVED BY PANORAMA ANTENNAS Q.C. BEFORE COMMENCING PRODUCTION.
2. ALL MATERIALS SUPPLIED MUST BE RoHS3 (DIRECTIVE (EU) 2015/863) COMPLIANT AND MUST NOT CONTAIN ANY SUBSTANCES OF VERY HIGH CONCERN (SVHCs) LISTED UNDER REACH OR POLY-AROMATIC HYDROCARBONS (PAHs), OR PERSISTENT ORGANIC POLLUTANTS (POPs) CONTROLLED BY THE STOCKHOLM CONVENTION.

PCN	REV.	DESCRIPTION	DATE	DRN.
01019	1	INITIAL ISSUE	12/02/2019	AA
01019	2	ADDED PRODUCT LABEL AND ALT DESC.	16/04/2019	AA

PRODUCT/ASSEMBLY	1012 - MIMO & DIVERSITY ANTENNAS
MATERIAL	N/A
FINISH	N/A
WEIGHT 172.57g	SHEET 1 OF 2

DESCRIPTION: MIMO DESK MOUNT ANTENNA WITH SCREEN CLIPS, 2m TWIN COAX, SMA PLUGS. (700-3800MHz) △2

APPROVED	D.O. CHECK	SCALE	DIMENSIONS IN mm
KD	IC	1:1.5	

PANORAMA ANTENNAS