DRG. No.	DWMM4-6-60-VARSP	© 2021 A4 THIS DOCUMENT MUST NOT BE COPIED OR DISCLOSED TO A THIRD PARTY WITHOUT THE WRITTEN CONSENT OF PANORAMA ANTENNAS LTD.	DO NOT SCALE	DENOTES LATEST ISSUE CHANGES	DENOTES CRITICAL VALUE	PROJECTION

TOLERANCES UNLESS OTHERWISE STATED			
0 DEC. PLACE	±0.5	2 DEC. PLACES	±0.1
1 DEC. PLACE	±0.2	ANGULAR	±1°

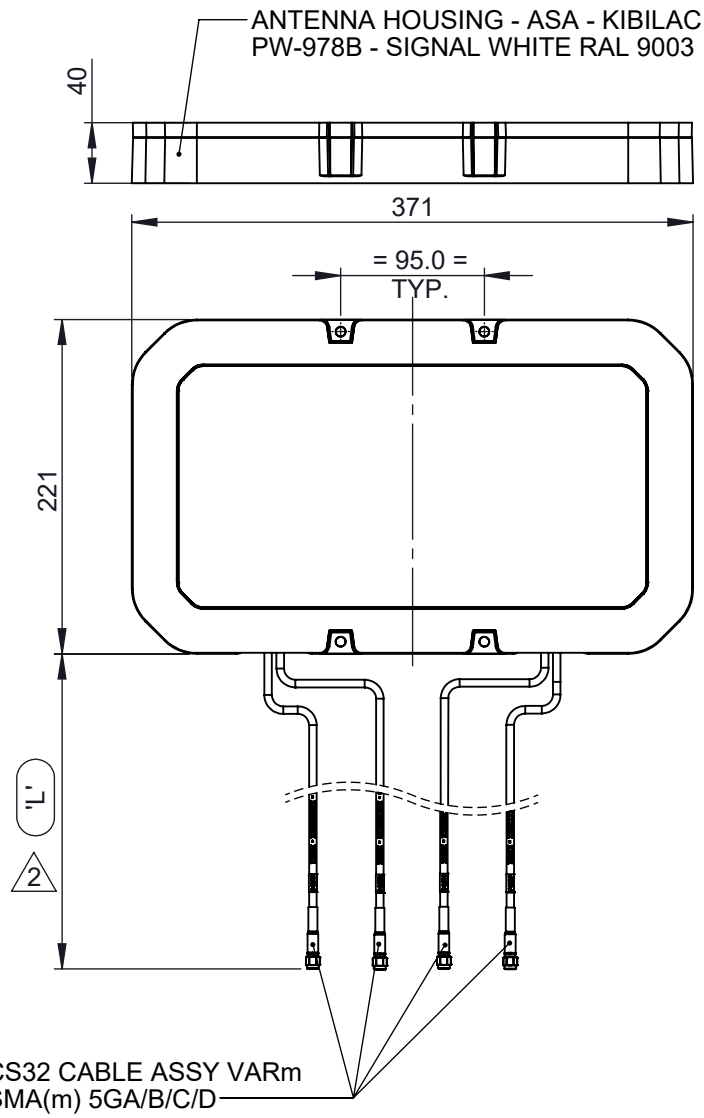

NOTES:

1. SAMPLES MUST BE APPROVED BY PANORAMA ANTENNAS Q.C. BEFORE COMMENCING PRODUCTION.

2. ALL MATERIALS SUPPLIED MUST BE RoHS3 (DIRECTIVE (EU) 2015/863) COMPLIANT AND MUST NOT CONTAIN ANY SUBSTANCES OF VERY HIGH CONCERN (SVHCs) LISTED UNDER REACH OR POLY-AROMATIC HYDROCARBONS (PAHs), OR PERSISTENT ORGANIC POLLUTANTS (POPs) CONTROLLED BY THE STOCKHOLM CONVENTION

ELECTRICAL PROPERTIES:

4X4 MIMO CELL LTE - FREQUENCY RANGE: 617-960/1427-6000MHZ

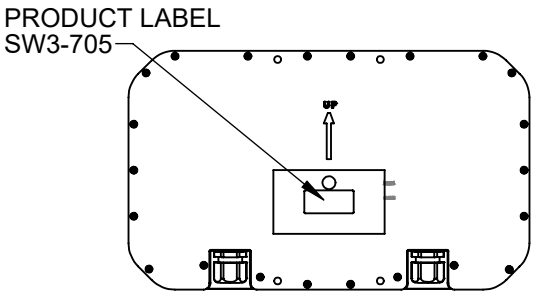

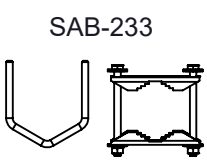
SAB-233

MAST MOUNT BRACKET SUPPLIED LOOSE

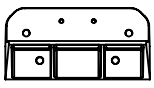
SP8-0987

WALL MOUNT BRACKET SUPPLIED LOOSE

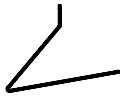
SP5-0663

DESK STAND X2 SUPPLIED LOOSE


x1 SAB-244
x2 SF1-0181


x4 SF3-0010
x2 SF3-0011
x2 SF2-0012

FIXINGS SUPPLIED IN SW1-009

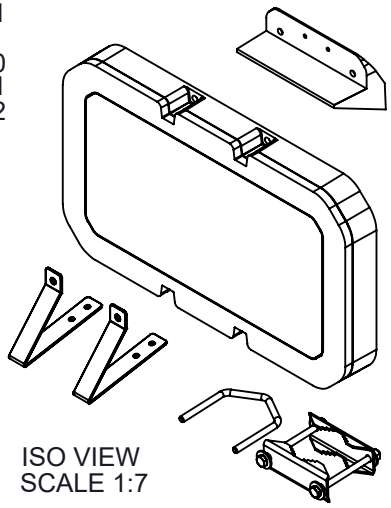

ISO VIEW
SCALE 1:7

PART NO.	CABLE 'L'	TOLERANCE	WEIGHT g
DWMM4-6-60-5SP	5000	±50	1600

PCN	REV.	DESCRIPTION	DATE	DRN.
01019	1	PRODUCTION CHANGE	08/02/2022	NL
01019	2	CABLE UPDATE	13/05/2022	NL

PRODUCT/ASSEMBLY: 1012 - MIMO & DIVERSITY ANTENNAS

MATERIAL: N/A

FINISH: N/A

WEIGHT: SEE TABLE

SHEET 1 OF 2

DESCRIPTION: WALL DESK MOUNT 4x4 4G/5G ANT VARm SMA (m)

APPROVED	D.O.CHECK	SCALE	DIMENSIONS IN mm
IC	GP	N.T.S	

PANORAMA ANTENNAS