THIS DOCUMENT MUST NOT BE COPIED OR DISCLOSED TO A THIRD PARTY WITHOUT THE WRITTEN CONSENT OF PANORAMA ANTENNAS LTD.

© 2004 A4

DO NOT SCALE

PROJECTION

DRG. No. EFC3G-3F

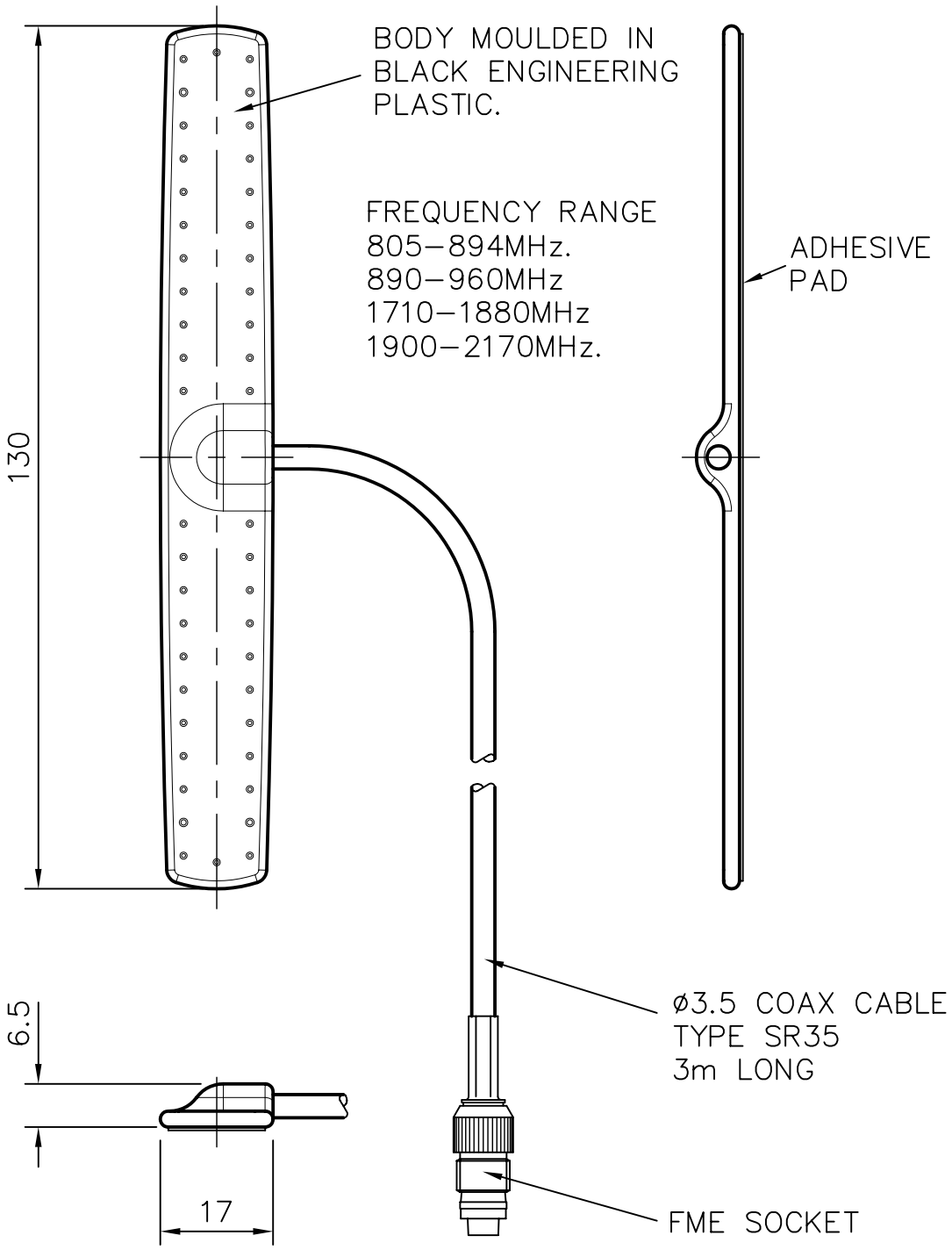

△ — DENOTES LATEST ISSUE CHANGES

C/NOTE	ISSUE	DATE	APPROVAL
01019	1	11.11.04	K.D.

TOLERANCES UNLESS OTHERWISE STATED
0 DEC. PLACE ±0.5 2 DEC. PLACES ±0.1
1 DEC. PLACE ±0.2 ANGULAR ±1°

DRAWN A.G. | DO.CHECK K.D.

SCALE 1:1 | DIMENSIONS IN mm

FILE EFC3G-3F

TITLE
MULTIBAND CELLULAR "EASY FIT" COVERT ANTENNA

MATERIAL | FINISH

PANORAMA ANTENNAS