THIS DOCUMENT MUST NOT BE COPIED OR DISCLOSED TO A THIRD PARTY WITHOUT THE WRITTEN CONSENT OF PANORAMA ANTENNAS LTD.

© 2014 A4

DO NOT SCALE

PROJECTION

DRG. No. GPSK-S1G-HYT

THIS IS A PROPRIETARY ITEM OF PANORAMA ANTENNAS LTD. AND COULD BE SUBJECT TO CHANGE WITHOUT PRIOR NOTICE. THIS ITEM IS RoHS COMPLIANT.

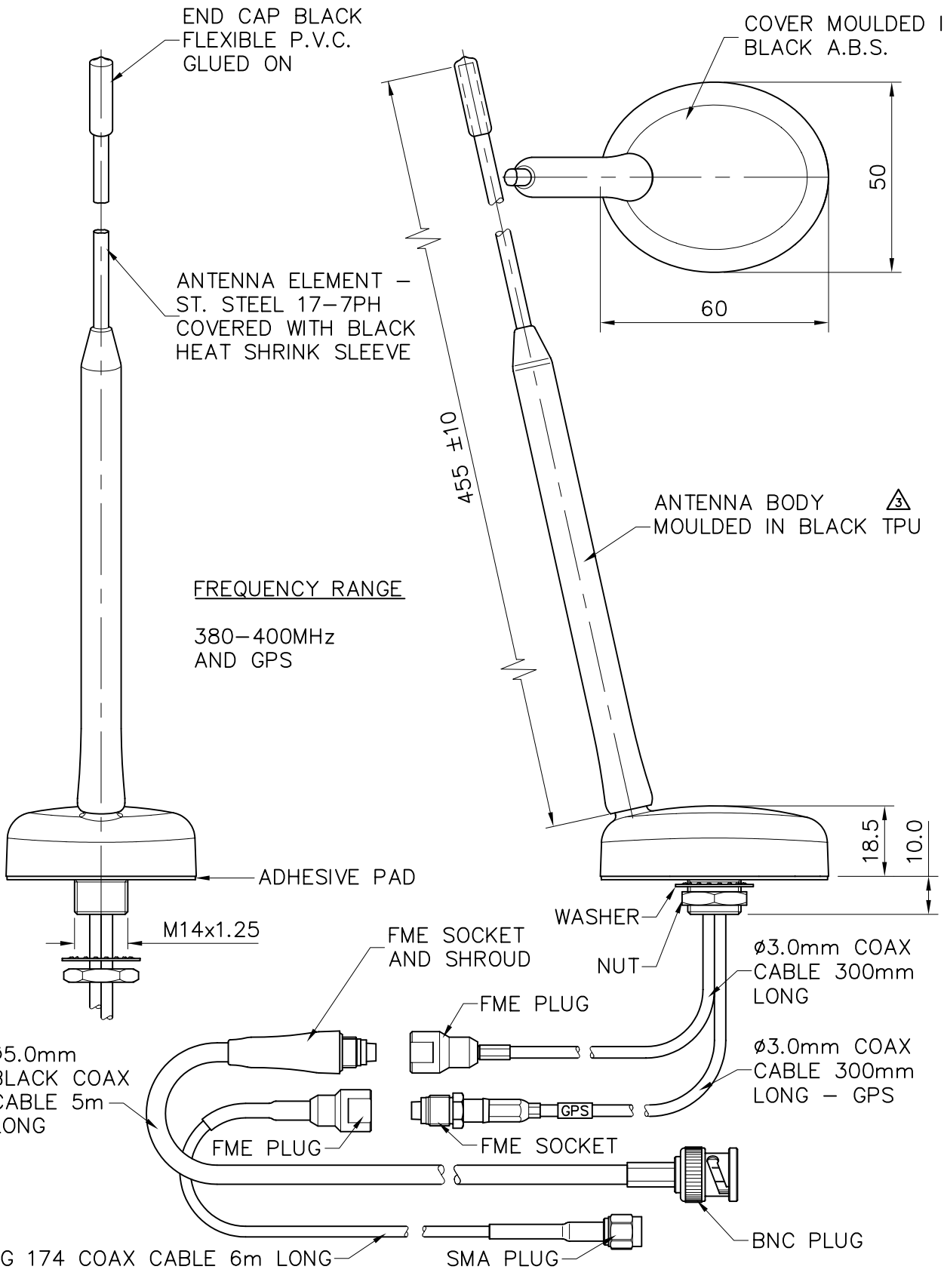

△ — DENOTES LATEST ISSUE CHANGES

C/NOTE	ISSUE	DATE	APPROVAL
01019	1	22.01.14	K.D.
01019	2	18.02.14	K.D.
01019	3	13.03.14	J.J.

TOLERANCES UNLESS OTHERWISE STATED
0 DEC. PLACE ±0.5 2 DEC. PLACES ±0.1
1 DEC. PLACE ±0.2 ANGULAR ±1°

MATERIAL

FINISH

TITLE

PANEL MOUNT 3dB 380–400MHz. + GPS ANTENNA + CABLES

DRAWN	DO.CHECK	SCALE	DIMENSIONS IN mm
A.G.	K.D.	2:3	

PANORAMA ANTENNAS